Aurora

Argo 8x8

2019 PARTS MANUAL

Aurora 800
Aurora 800 SX
Aurora 800 SX Hunt Master
Aurora 800 Limited

For factory installed accessory parts included with your vehicle see 2019 Aurora Accessories Manual

Ontario Drive & Gear Limited **Manual No. 10733C** **2019/11/28**
www.argoxtv.com **Printed in Canada**

Foreword

ODG has prepared this parts manual for the Aurora models to assist both qualified mechanics and vehicle owners in ordering correct, quality replacement ARGO parts. For the most current parts manual contact your dealer or visit our website at www.argoxtv.com.

Proper and regular service, and replacing old, worn or broken parts with the correct ARGO replacement parts, are both essential to prolonging the life of the ARGO. Please refer to this parts manual and/or our website www.argoxtv.com before ordering any replacement part.

All information contained in this Aurora Parts Manual is based on the latest product specification available at time of release. If your Aurora differs from the specifications contained in this manual, contact your dealer for the most current information.

ODG reserves the right to alter specifications on the Aurora models at any time, without obligation or prior notification.

Reproduction of this Aurora Parts Manual, in whole or in part, is prohibited without prior written permission from Ontario Drive & Gear Limited.

Vehicle Identification

Aurora - 2019 Serial Nos... last 5 digits of V.I.N.

Explanation of Parts Manual Format

Ref - Reference number between assembly diagram and component parts list

Part No. - Argo replacement part number for identification and re-ordering

Description - Part description for identification and re-ordering

Qty - Indicates the quantity of a part used in an assembly

Using the Parts Manual

1. Find the major vehicle assembly in the Table of Contents on this page, and turn to that section.

2. Locate the part in the illustration that you wish to order.

3. Refer to the parts list in that section.

4. Find the correct part number (Part No.), part description (Description) and correct quantity (Qty).

5. Use *only* this information to order ARGO replacement parts. *DO NOT* attempt to order a replacement part by reference number or page number.

Table of Contents

Foreword i
Vehicle Identification i
Using the Parts Manual ii

1.0 Upper Body Group 1
2.0 Chassis Group 3
3.0 Lower Body Group 5
4.0 Covers Group 7
5.0 Axle & Driveline Group 9
6.0 Fuel Group 11
7.0 Intake Group 13
8.0 Exhaust Group 14
9.0 Wheel Group - Standard 15
9.1 Wheel Group - Steel Beadlock 16
9.2 Wheel Group - Aluminum Beadlock 17
10.0 Seat Group - Front 18
10.1 Seat Group - Rear 19
11.0 Steering & Brakes 21
12.0 Clutch Group 23
13.0 Transmission Group, Cable FNR 25
13.1 Transmission Sub-Assys (6.2) 27
13.2 Transmission Sub-Assys (8.1) 29
13.3 Transmission & Controls Group 31
14.0 Engine Group - ELH775 33
15.0 Labels Group 35
15.1 Labels Group, By Region 37
16.0 Electrical Group 39
16.1 Main Wire Harness - Schematic 41
16.2 Main Wire Harness - Wire Diagram 43
16.3 Main Wire Harness - Photo Diagram 45

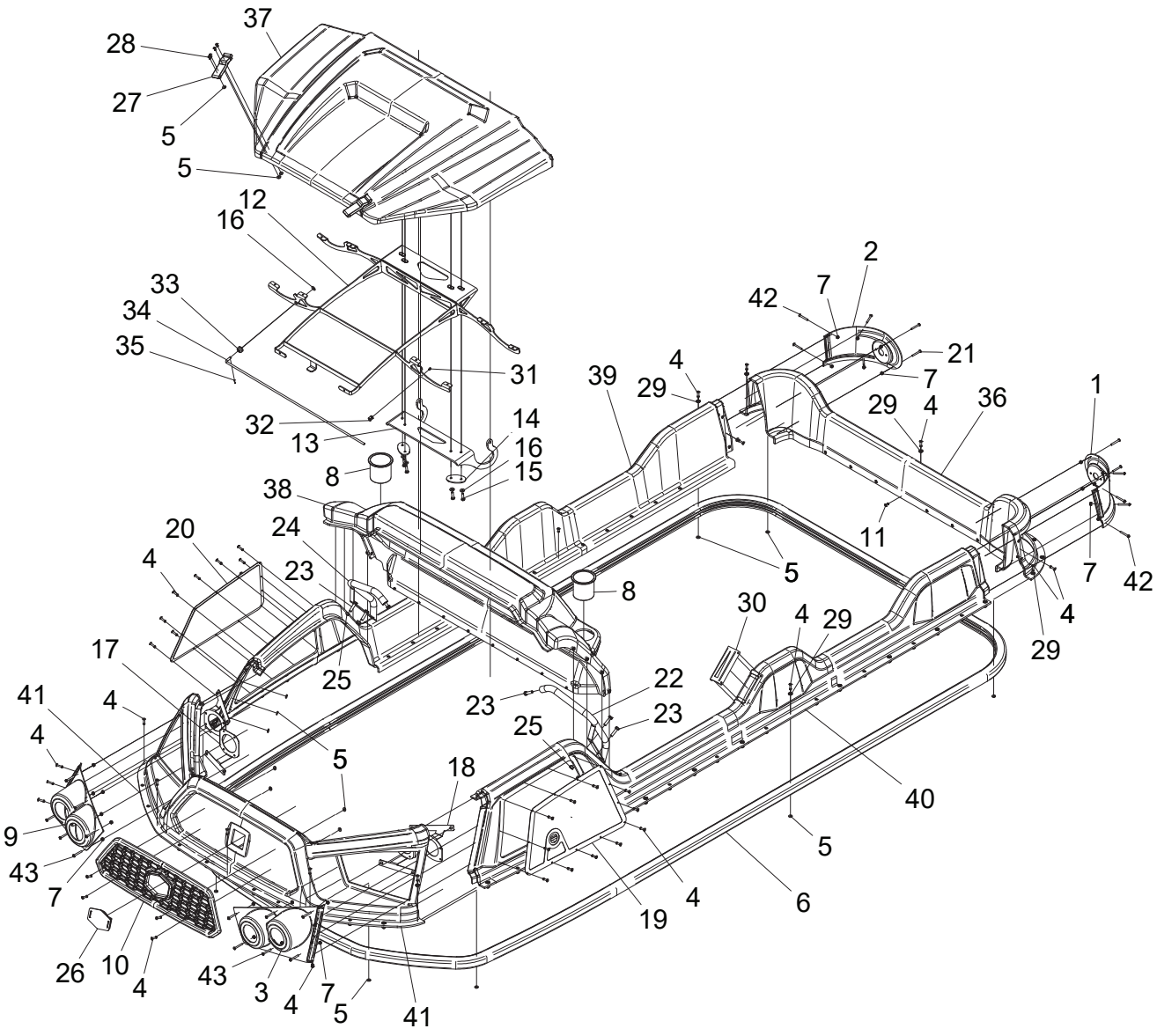
37
28
27
5
5
12
16
33
34
35
31
32
13
14
16
15
8
38
20
24
4
23
25
17
41
4
4
5
9
43
7
26
10
4
43
3
4
7
5
41
18
39
4
29
2
7
42
21
7
29
4
36
1
11
5
8
30
4
29
4
29
7
42
22
23
23
25
40
5
19
4
6

Ref.	Qty.	Part #	Description
1	1	10220C	Bucket, Light - LR
2	1	10221C	Bucket, Light - RR
3	1	10218C	Bucket, Light - LF
4	126	120-09	Rivet - 3/16 x 1.0 Black
5	120	120-04	Washer .19x.50x.08 Zn
6	1	801-05	Bumper, Vinyl - 8x8
7	12	117-10	Locknut, 10-24 N/l Zn
8	2	100-109	Cup Holder Insert
9	1	10219C	Bucket, Light - RF
10	1	10217C	Panel, Grille
11	41	120-13	Rivet - 3/16 x 3/4 Black
12	1	10223C	Frm Wldt, Hood
13	1	10173C	Bracket, Hinge - Hood
14	2	10172C	Washer, Hinge - Hood
15	4	103-08	HHCS 1/4-20x1.0 Bnz
16	5	108-08	Washer .28x.62x.07 Zn
17	1	10361C	Bracket, Headlight RH
18	1	10360C	Bracket, Headlight LH
19	1	10351C	Wldt, Exhaust Screen
20	1	10354C	Wldt, Intake Screen
21	4	112-07	RHMS 10-24x1.50 Zn
22	1	10537C	Wldt, Handle - Left
23	6	103-38	HHCS 5/16-18x1.25 Gr5 Bnz
24	1	10538C	Wldt, Handle - Right
25	4	117-03	Nut, Fin Hex 5/16-18 Zn
26	1	10542C	Wldt, Logo Plate
27	2	602-56	Latch, Hood - Soft Draw
28	8	120-11	Rivet, 5/32 x .157-.472
29	40	10092A004	Washer, Finishing - #10
30	1	10395C	Park Brake Cover
31	1	120-25	Rivet - 1/8 x 5/16
32	1	127-285	Retainer, Hood Prop
33	1	125-84	Grommet, Rubber
34	1	10640C	Rod, Hood Support
35	1	104-35	Pin, Cotter - 2mmx12mm
36	1	10213C	Panel, Rear
37	1	10216C	Panel, Hood
38	1	10211C	Panel, Dash
39	1	10215C	Panel, Right
40	1	10214C	Panel, Left
41	1	10212C	Panel, Front
42	12	103-48	T/S Pan Hd Phil #10 x 5/8 A Blk
43	8	103-25	PHMS 10-24 x 3/4 Bnz

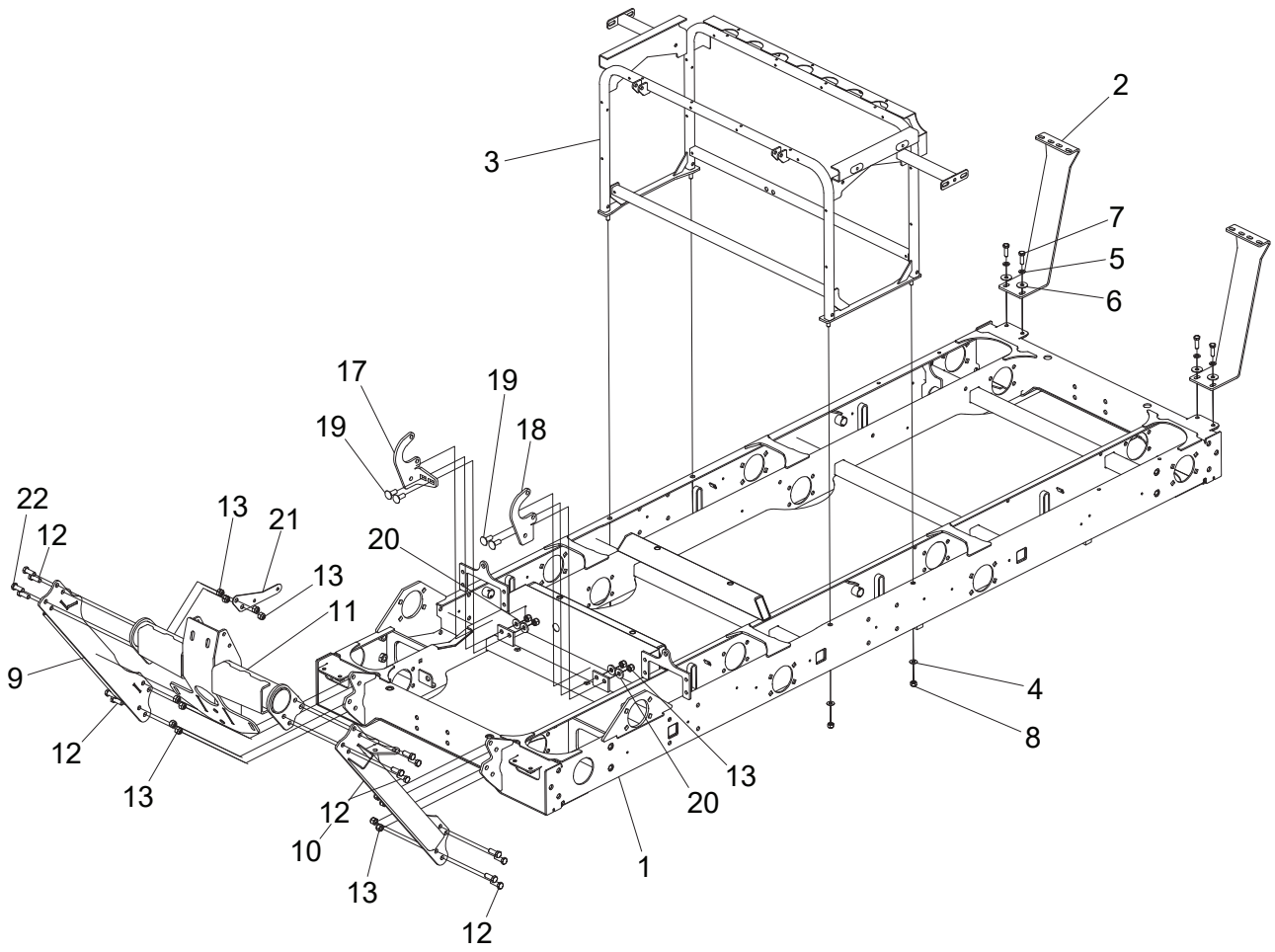
2
3
7
5
6
17
19
19
18
22
12
13
21
20
13
11
9
12
13
12
10
13
12
1
20
13
4
8

Ref.	Qty.	Part #	Description
1	1	10157C	Chassis, 8x8
2	2	10183C	Bracket, Rear Hoop
3	1	10190C	Wldt, Seat Frame
4	4	108-24	Washer .34x.70x.06 Zn
5	4	108-05	Lockwasher 5/16 Split-Ring Bnz
6	4	108-12	Washer .34x1.00x.06 Zn
8	4	117-21	Locknut, TD 5/16-18 Bnz
9	1	10561C	Wldt, Winch Support - Right
10	1	10565C	Wldt, Winch Support - Left
11	1	10555C	Wldt, Winch Mount
12	14	103-17	HHCS 3/8-16x1.0 Gr8 Zn
13	22	117-128	Locknut, Nylon 3/8-16 ZP
17	1	10335C	Brkt, Caliper HD RH
18	1	10336C	Brkt, Caliper HD LH
19	4	103-88	C/Bolt 3/8-16x1.0 Gr5 Zn
20	4	108-47	Washer .39x.94x.13 Zn Di-Chro
21	1	10678C	HHCS 3/8-16x1.5 Gr5 Zn
22	2	103-82	Bracket, Winch Solenoid

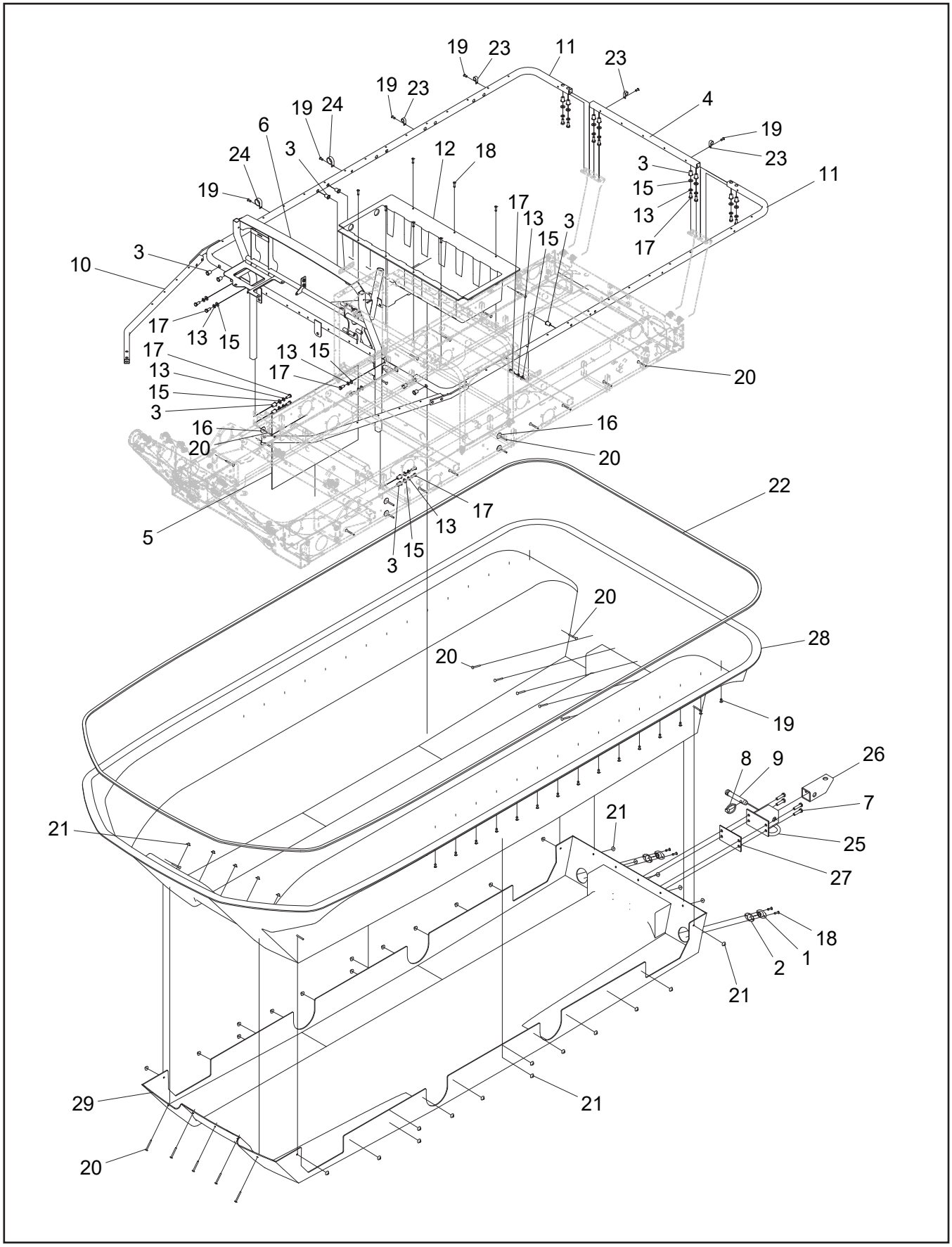
19
23
11
23
19
23
4
19
24
6
3
12
18
19
23
24
3
15
11
19
17
13
3
13
15
17
3
10
17
13
15
13
15
17
13
17
20
15
3
16
16
20
20
22
17
5
13
15
3
20
28
20
19
8
9
26
7
21
21
25
27
18
1
2
21
29
21
20

Ref.	Qty.	Part #	Description
1	2	100-107	Plug, Drain-Flanged
		100-115	Drain Plug (male) c/w O-Ring
2	2	100-114	Gasket, Drain Plug
3	19	10055A001	Insert Nut, 5/16-18 Unc
4	1	10209C	Rear Tube
5	1	10257C	Insulation, Lower Body
6	1	10264C	Wldt, Dash Support - QX8
7	4	103-61	HHCS 3/8-24x1.5 Gr5 Zn
8	1	104-11	CLP-580 Pin Lynch Locking-Ring-Clik Pins
9	1	104-13	Pin, Top Link
10	2	10569C	Tube, Winch Support
11	2	10570C	Tube, Outer Wldt
12	1	10586C	Under Seat Storage Box
13	19	108-05	Lockwasher 5/16 Split-Ring Bnz
14	4	108-08	Washer .28x.62x.07 Zn
15	19	108-24	Washer .34x.70x.06 Zn
16	8	108-42	Washer .21x1.0x.06 Zn
17	19	112-01	HHCS 5/16-18x3/4 Gr5 Zn
18	11	120-09	Rivet - 3/16 x 1.0 Black
19	39	120-13	Rivet - 3/16 x 3/4 Black
20	36	120-27	Pin, Magna Grip, Black Zn
21	36	120-28	Collar, Magna Grip Bnz
22	1	200-0001-323	PVC Foam Tape, 3/4" x 1/4" x 323"
23	6	126-93	Clamp, Nylon Wire - 1/2" ID
24	3	127-24	Clamp, Nylon - 1" ID
25	1	616-16	Hitch Assembly
26	1	616-19	Tube, Hitch Insert
27	1	616-20	Gasket, Rear Hitch
28	1	801-50	Body, Lower - Avenger
29	1	801-51	Skid Plate, 8x8

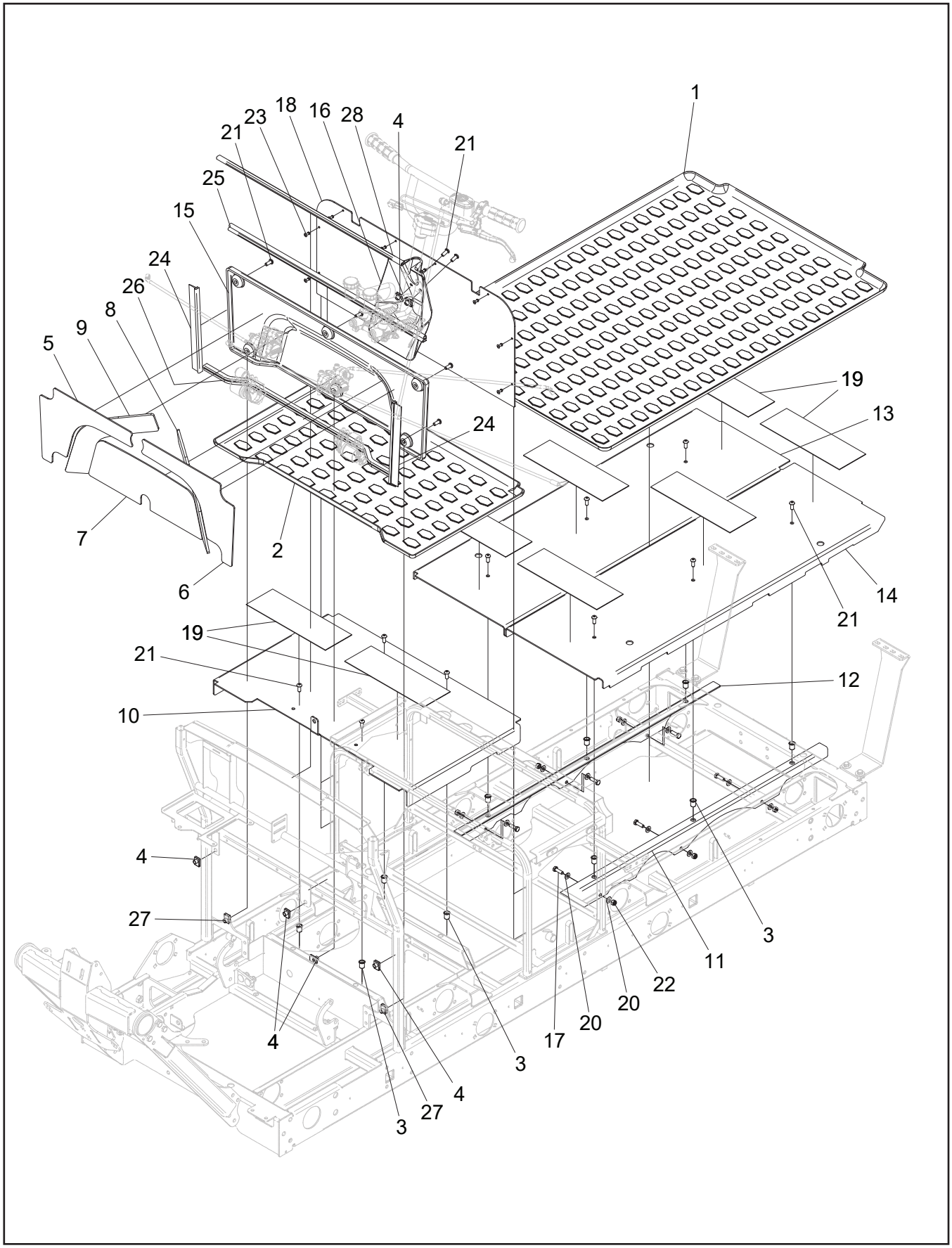
1
18
16
28
4
23
21
21
25
15
24
26
8
9
5
24
19
13
7
2
6
14
21
19
21
12
10
4
27
3
11
22
20
20
17
4
3
4
27
3

Ref.	Qty.	Part #	Description
1	1	10052C	Rear Floor Mat
2	1	10053C	Mat, Front - Flat Floor
3	10	10055A001	Insert Nut, 5/16-18 Unc
4	6	10056A006	Unut, 5/16-18 x .025-.150 PH
5	1	10100C	Insulation Firewall RH
6	1	10101C	Insulation Firewall LH
7	1	10102C	Insulation Firewall Center
8	1	10103C	Insulation, Firewall Cent LH
9	1	10104C	Insulation, Firewall Cent RH
10	1	10200C	Plate, Floor - Front
11	1	10201C	Support, Floor - Left
12	1	10202C	Support Floor - Right
13	1	10203C	Panel, Floor - Right
14	1	10204C	Panel, Floor - Left
15	1	10205C	Panel, Firewall
16	1	10222C	Cover Steering
17	6	103-06	HHCS 5/16-18x1.0 Gr5 Zn
18	1	10315C	Fuel Tank Cover
19	8	10321C	Grip Tape 12"
20	12	108-24	Washer .34x.70x.06 Zn
21	18	112-276	BHCS, 5/16-18 x0.75
22	6	117-127	Locknut, Nylon 5/16-18 ZP
23	8	120-13	Rivet - 3/16 x 3/4 Black
24	2	10304C011	Flap Seal 90 Degree - 10.75"
25	1	10364C030	Bulb Seal 90 - 7/16 Dia - 29.75"
26	1	10364C029	Bulb Seal 90 - 7/16 Dia - 29.5"
27	2	10056A007	Unut, 5/16-18 x .05-.200 PH
28	1	601-09	Trim, Vinyl - 28"

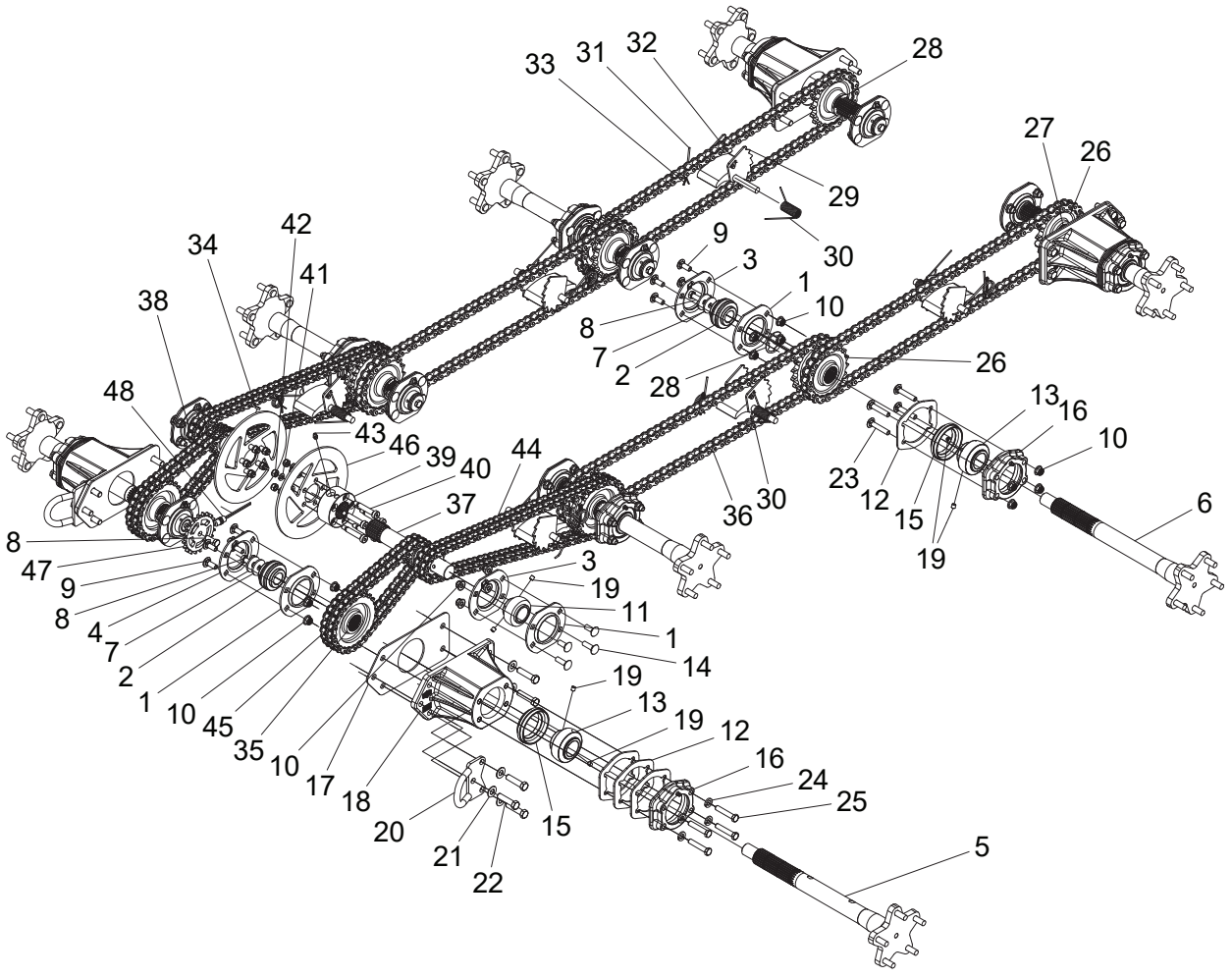
33
31
32
28
29
30
27
26
9
3
1
10
8
7
2
28
26
42
34
41
38
48
43
46
39
40
44
37
36
30
13
16
10
23
12
15
19
6
8
47
9
8
4
7
2
1
10
45
35
10
17
18
20
21
22
15
3
19
11
1
14
19
13
19
12
16
24
25
5

Ref.	Qty.	Part #	Description
1	10	606-91	Flange, 4-Hole HD
2	8	101-41	Bearing, Ball- 1.0
3	8	606-92	Flange, Greaseable - 4-Hole HD
4	2	606-93	Flange, Greaseable - 90 Deg HD
5	4	810-122	Asm, Axle Forged - Fr/Rr
6	4	810-123	Asm, Axle Forged - Mid
7	14	108-46	Washer .40x1.37x.12 Hi-Carbon
8	8	112-31	HHCS 3/8-16x1.0 2B Gr8 Zn
9	36	103-88	C/Bolt 3/8-16x1.0 Gr5 Zn
10	56	117-118	Locknut, Nylon 3/8-16, Flanged
11	2	101-96	Bearing,Ball-1.25
12	16	606-90	Gasket, Flange -72mm Brg
13	8	101-123	Bearing, Ball -1.25 x 72mm
14	4	112-61	C/Bolt 3/8-16x1.25 Gr5 Zn
15	8	606-89	Carrier, Axle Bearing
16	8	606-88	Flange Asy, Outer Bearing
17	4	606-25	Gasket, Bearing Extension
18	4	810-112	Extension Asy, Bearing W/ Nuts
19	20	112-200	Shss 5/16-24x5/16 Flat Pt
20	2	642-47	Tie Down Bracket
21	20	108-34	Washer .47x.94x.06 Zn
22	20	112-181	HHCS 7/16-20x1.75 Gr5 Zn
23	16	112-187	C/Bolt 3/8-16x2.0 Gr5 Zn
24	16	108-27	Lockwasher 7/16 Split-Ring Zn
25	16	103-68	Hhcs 3/8-16x2.0 Gr5 Zn
26	8	805-143	Sprocket, S60x19t-16/32 Int
27	6	106-15	Retaining Ring Sh-0137-Pa
28	6	106-34	Retaining Ring, E-Style - 1.375"
29	6	606-82	Tensioner Asy, Chain - Course
30	6	127-64	Spring, Torsion - .76 x 1.9
31	6	127-65	Spring, Torsion - 1.16 x 0.35
32	6	606-44	Slider Block - UHMW
33	6	100-01	Pin, Cotter 1/8x1.50 Zn
34	1	613-127	Magnet, Speedometer
35	4	805-142	Sprocket, D50x25t-16/32 Int
36	4	803-57	Chain, RC60-1 x 90P
37	1	810-116	Shaft, Idler, Splined, Long, 11T
38	1	810-115	Shaft, Idler, Splined, Short, 11T
39	2	810-117	Coupler, Idler Shaft
40	10	112-201	Bolt, Shoulder M10x45
41	10	108-05	Lockwasher 5/16 Split-Ring Bnz
42	10	117-77	Locknut, Nylon - M8x1,25mm Zn8
43	2	100-127	Fitting, Grease Str 1/4-28 TPR
44	2	803-65	Chain, RC50-2x80p-Middle
45	2	603-19	Chain RC50-2x44p - Front
46	2	165-25	Disc, Brake, Service
47	1	10308C	Disc, Wheel Speed Sensor
48	1	10011B	Sensor, Speed

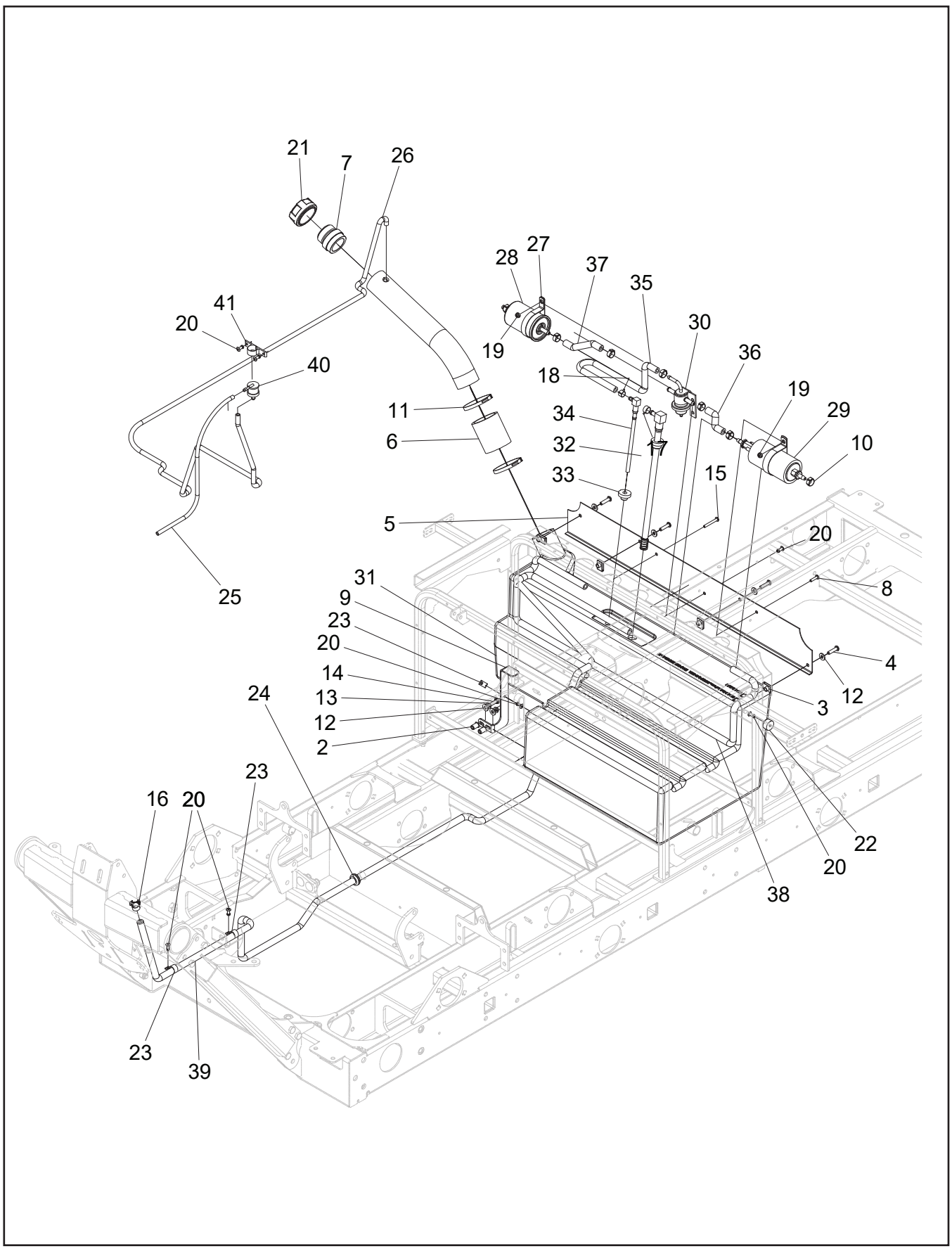
21
7
26
28
27
37
35
41
20
30
19
36
40
18
19
11
34
29
6
32
10
33
15
5
20
31
8
9
23
20
4
14
12
13
3
24
12
2
23
16
20
22
20
38
23
39

Ref.	Qty.	Part #	Description
1	6	100-64	Tie Wrap - 5.5" - Black
2	2	10055A003	Insert Nut, 1/4-20 UNC
3	4	10056A02	Unut, 1/4-20 x .025-.150 PH
4	4	10153A100	BHCS,1/4-20-1 Gr5 BNZ
5	1	10206C	Plate, Fuel Rail
6	1	10251C	Hose, Fuel Fill
7	1	10253C	Wldt, Fuel Fill Neck
8	1	103-25	PHMS 10-24x3/4 Zn
9	1	10320C	Brkt, Tank Hold Down
10	6	112-243	Clamp, Fuel Infection, 5/16
11	2	100-12	Clamp, Gear 15/16-2,3/4
12	6	108-08	Washer .28X.62X.07 Zn
13	2	108-105	Lockwasher, 1/4 Split, Blk Zn
14	2	112-04	HHCS 1/4-20x3/4 Gr5 Zn
15	1	112-07	RHMS 10-24x1.50 Zn
16	1	112-243	Clamp, Fuel Injection 5/16"
17	1	112-78	Clamp, Hose 9/16" Black
18	1	112-79	Clamp, Hose 1/2" Black
19	2	117-10	Locknut, 10-24 N/I Zn
20	8	120-13	Rivet - 3/16 x 3/4 Black
21	1	126-100	Fuel Cap, Tethered
22	2	126-102	Bumper, Recessed Hole
23	3	126-93	Clamp, Nylon Wire - 1/2" ID
24	1	127-132	Grommet, Rubber - 1/2" ID
25	1	127-160-15	Hose, Vent 3/16" ID 15"
26	1	127-160-76	Tubing, 1/4 ID Clear Plastic 76"
27	1	127-276	Clamp, Loop, 2 1/4"-XT
28	1	24 050 03	Filter, Fuel - Kohler EFI
29	1	24 393 52	Pump, Fuel
30	1	24 403 16	Regulator Assembly
31	1	608-120	Tank, Fuel Low Permeation
32	1	608-127	Pick-Up, Fuel 5/16, 105 Mesh
33	1	608-136	Grommet, Fuel Return
34	1	608-138	Fitting, Brass - 90 Deg
35	1	608-67-17	Hose, Fuel - 1/4" ID - 17"
36	1	608-69-3	Hose, Fuel - 5/16" ID, Carb 3"
37	1	608-69-4	Hose, Fuel - 5/16" ID, Carb 4"
38	1	608-69-56	Hose, Fuel - 5/16" ID, Carb 56"
39	1	608-69-84	Hose, Fuel - 5/16" ID, Carb 84"
40	1	609-47	Valve, Rollover
41	1	609-50	Clamp, Rollover Valve

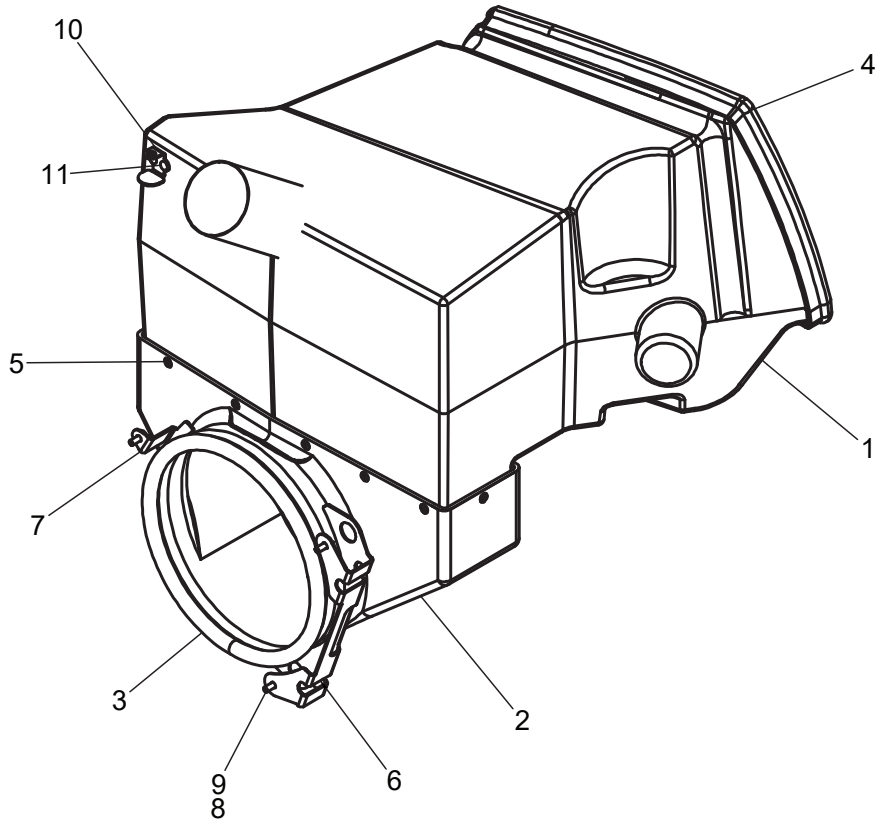

Ref.	Qty.	Part #	Description
1	1	10617C	Duct, Upper - Fan Cooled
2	1	10618C	Duct, Lower - Fan Cooled
3	1	807-77-31	Seal, Bulb - 31"
4	1	807-77-40	Seal, Bulb - 40"
5	12	120-14	Rivet - 3/16 x 5/8 Black
6	1	10773C	Retainer, Intake Duct - Lower
7	1	10774C	Retainer, Intake Duct - Upper
8	3	108-08	Washer .28 x.62 x .07 Zn
9	3	112-118	HHCS M6 x 1,0 x 15mm
10	1	10776C	Bracket, Prop Rod
11	2	120-09	Rivet, 3/16 x 1.0 Black
12	1	864-10	Hose, Brake 3" x 6"

8.0 Exhaust Group-Aurora 800

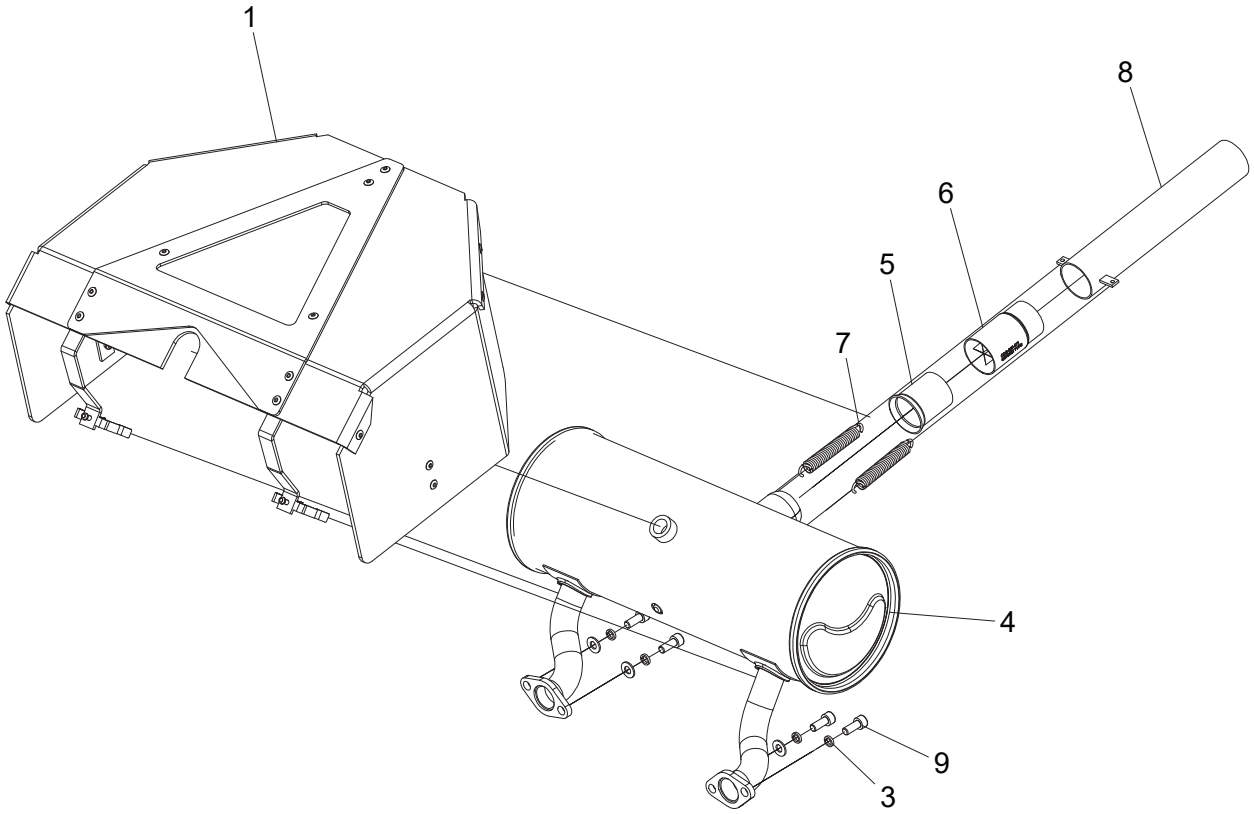

Ref.	Qty.	Part #	Description
1	1	10047J	Heat Shield Assembly, Muffler
3	4	108-02	Lockwasher 5/16 Hi-Collar Bare
4	1	607-212	Muffler, Kohler Aegis - Ees
5	1	607-135	Tube, Muffler, Flared X 2.0
6	1	607-171	Spark Arrestor - ODG
7	2	127-187	Spring, Ext 17/32 x 3.75
8	1	10294C	Exhaust Pipe Wldt, 1.75 OD x 9.50
9	4	112-30	SHCS M8x1,25x20mm Zn

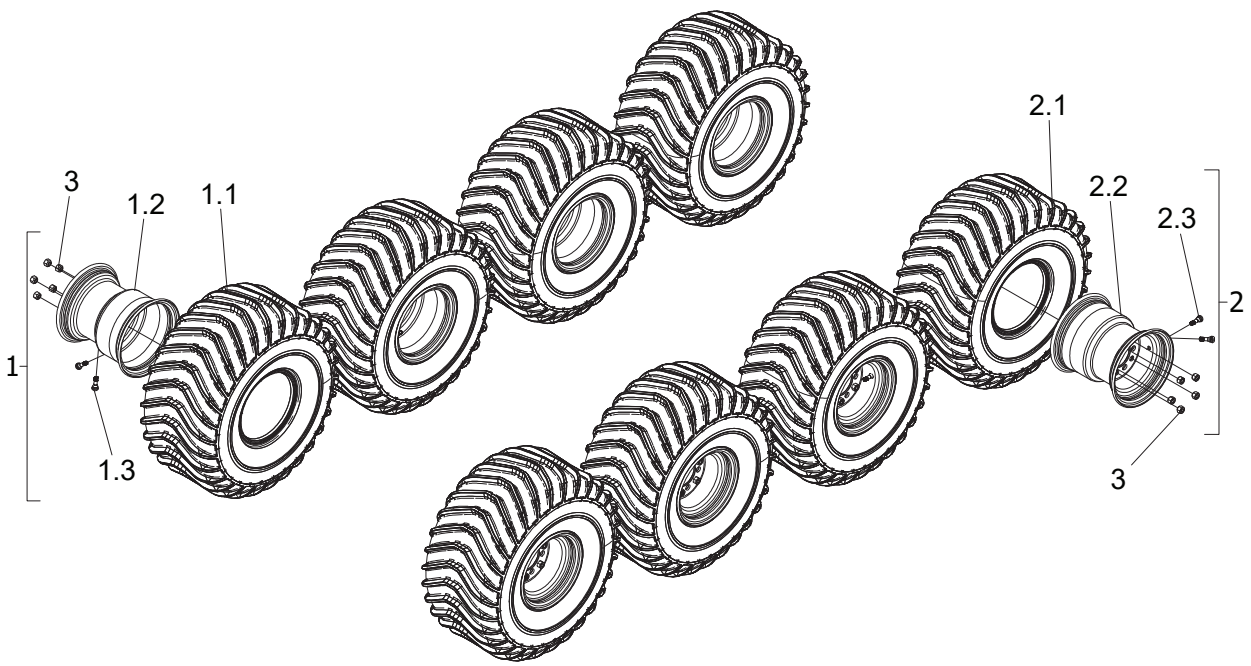

Ref.	Qty.	Part #	Description
1	4	10010CVRT	Wheel, 25" STL Rim RT
1.1	1	10001C	Tire, 25 x 12 - 9 XT117
1.2	1	10004C	Rim, 9 x 10 Steel
1.3	2	125-26A	Valve, Tire - Unassembled
2	4	10010CVLT	Wheel, 25" STL Rim LT
2.1	1	10001C	Tire, 25 x 12 - 9 XT117
2.2	1	10004C	Rim, 9 x 10 Steel
2.3	2	125-26A	Valve, Tire - Unassembled
3	40	117-35	Nut, Wheel 7/16-20 Zn

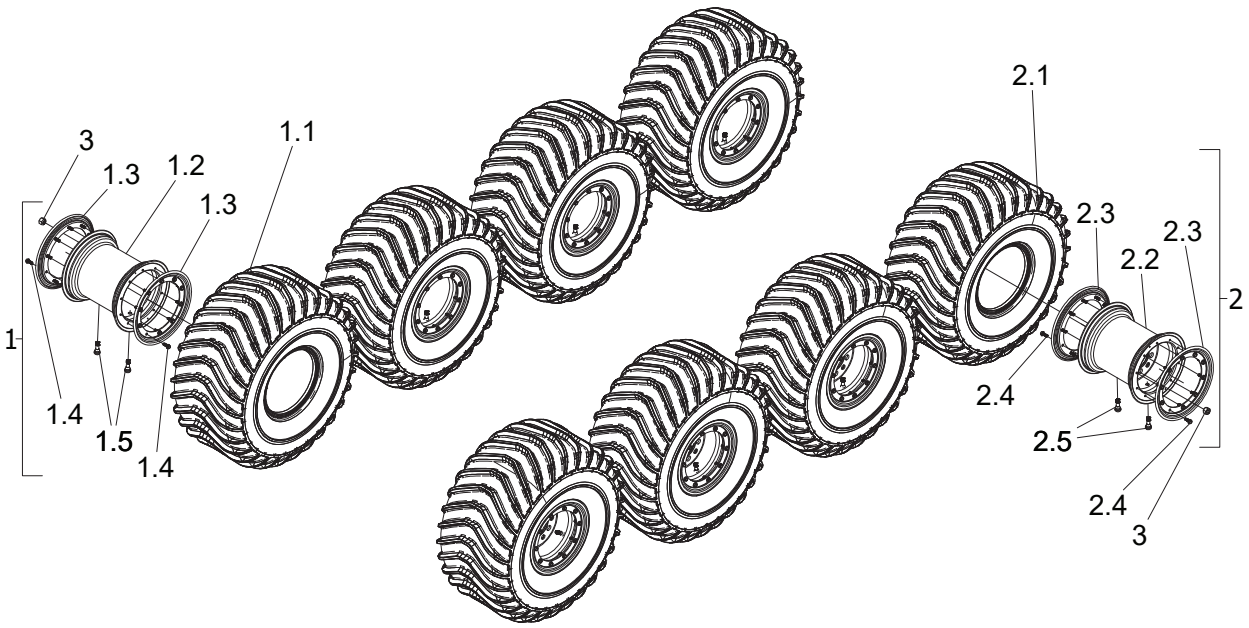

Ref.	Qty.	Part #	Description
1	4	10008CVRT	Wheel, 25" Stl Beadlock Right
1.1	1	10001C	Tire, 25 x 12 - 9 XT117
1.2	1	10006C	Rim, Steel Beadlock 9 x 10
1.3	1	10015C	Ring, Steel Beadlock Blk (Pk of 2)
1.4	1	10016C	Bolt, Steel Beadlock Ring (Pk of 20)
1.5	2	125-26A	Valve, Tire - Unassembled
2	4	10008CVLT	Wheel, 25" Stl Beadlock Left
2.1	1	10001C	Tire, 25 x 12 - 9 XT117
2.2	1	10006C	Rim, Steel Beadlock 9 x 10
2.3	1	10015C	Ring, Steel Beadlock Blk (Pk of 2)
2.4	1	10016C	Bolt, Steel Beadlock Ring (Pk of 20)
2.5	2	125-26A	Valve, Tire - Unassembled
3	40	117-35	Nut, Wheel 7/16-20 Zn

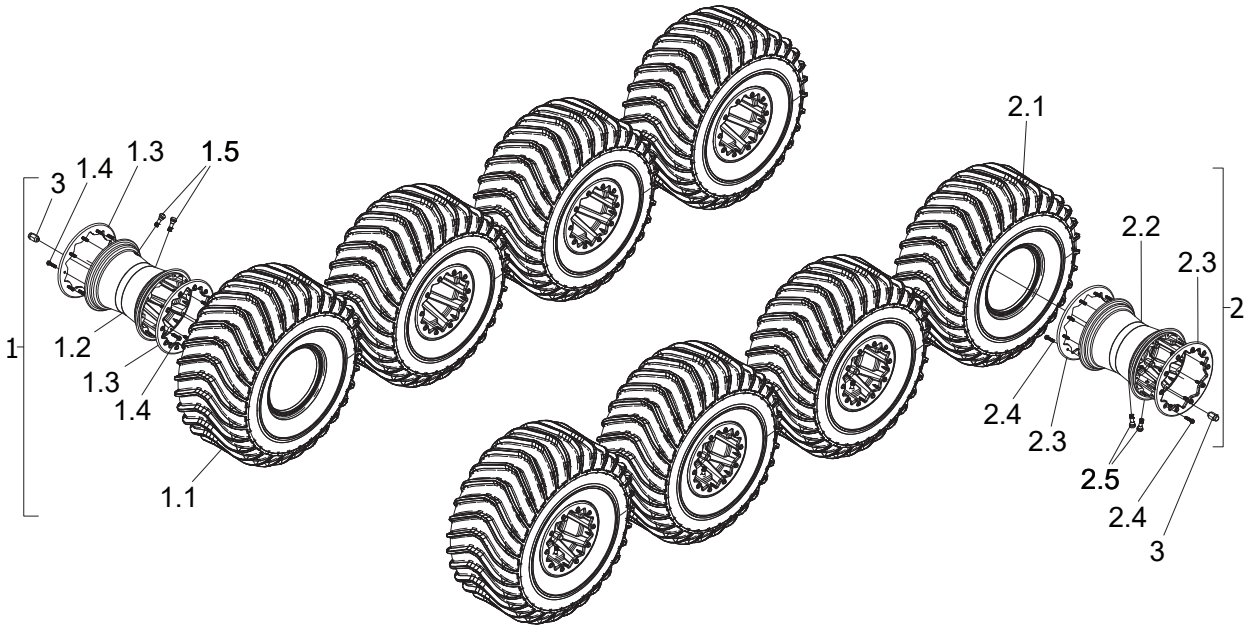

Ref.	Qty.	Part #	Description
1	4	10009CVRT	Tire, 25 X 12 - 9 XT117
1.1	1	10001C	Wheel, 25" AL Beadlock RT
1.2	1	10007C	Rim, Alum Beadlock 9 x 10
1.3	1	10014C	Ring, Alum Beadlock Blk (Pk of 2)
1.4	1	10017C	Bolt, Alum Beadlock Ring (Pk of 20)
1.5	2	125-26A	Valve, Tire - Unassembled
2	4	10009CVLT	Wheel, 25" AL Beadlock LT
2.1	1	10001C	Tire, 25 x 12 - 9 XT117
2.2	1	10007C	Rim, Alum Beadlock 9 x 10
2.3	1	10014C	Ring, Alum Beadlock Blk (Pk of 2)
2.4	1	10017C	Bolt, Alum Beadlock Ring (Pk of 20)
2.5	2	125-26A	Valve, Tire - Unassembled
3	40	117-117	Acorn Nut, Wheel, 7/17-20, Chrome

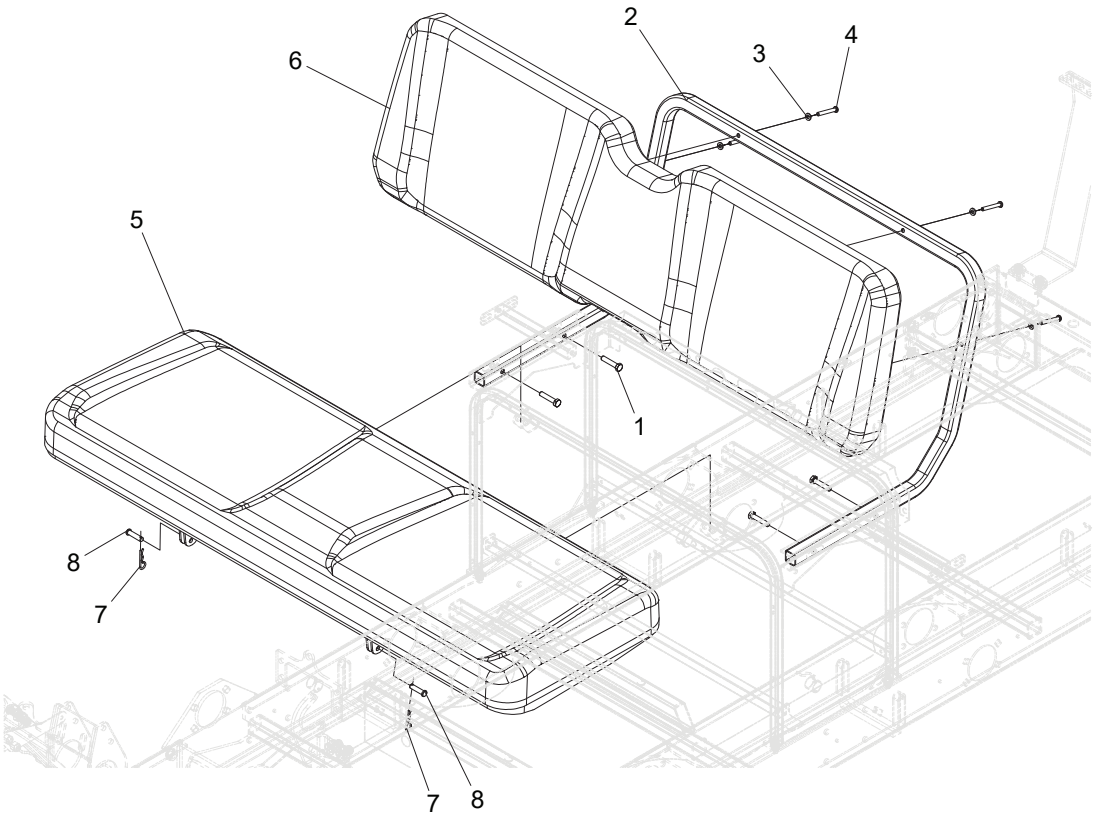

Ref.	Qty.	Part #	Description
1	4	103-57	HHCS 5/16-18x1.5 Gr5 Bnz
2	1	10341C	Tube, Backrest Frame
3	4	108-03	Lockwasher 1/4 Split Ring Zn
4	4	10156A045	BHCS, M6x1.0x45 Gr8.8 Bnz
5	1	10339C	Seat, Bench - Formed
6	1	10340C	Seat, Backrest - Formed
7	2	10171A002	Pin, Hairpin 0.093 1/4-5/16 Shaft Zp
8	2	10077A001	Pin, Clevis 5/16x1.25 Zn

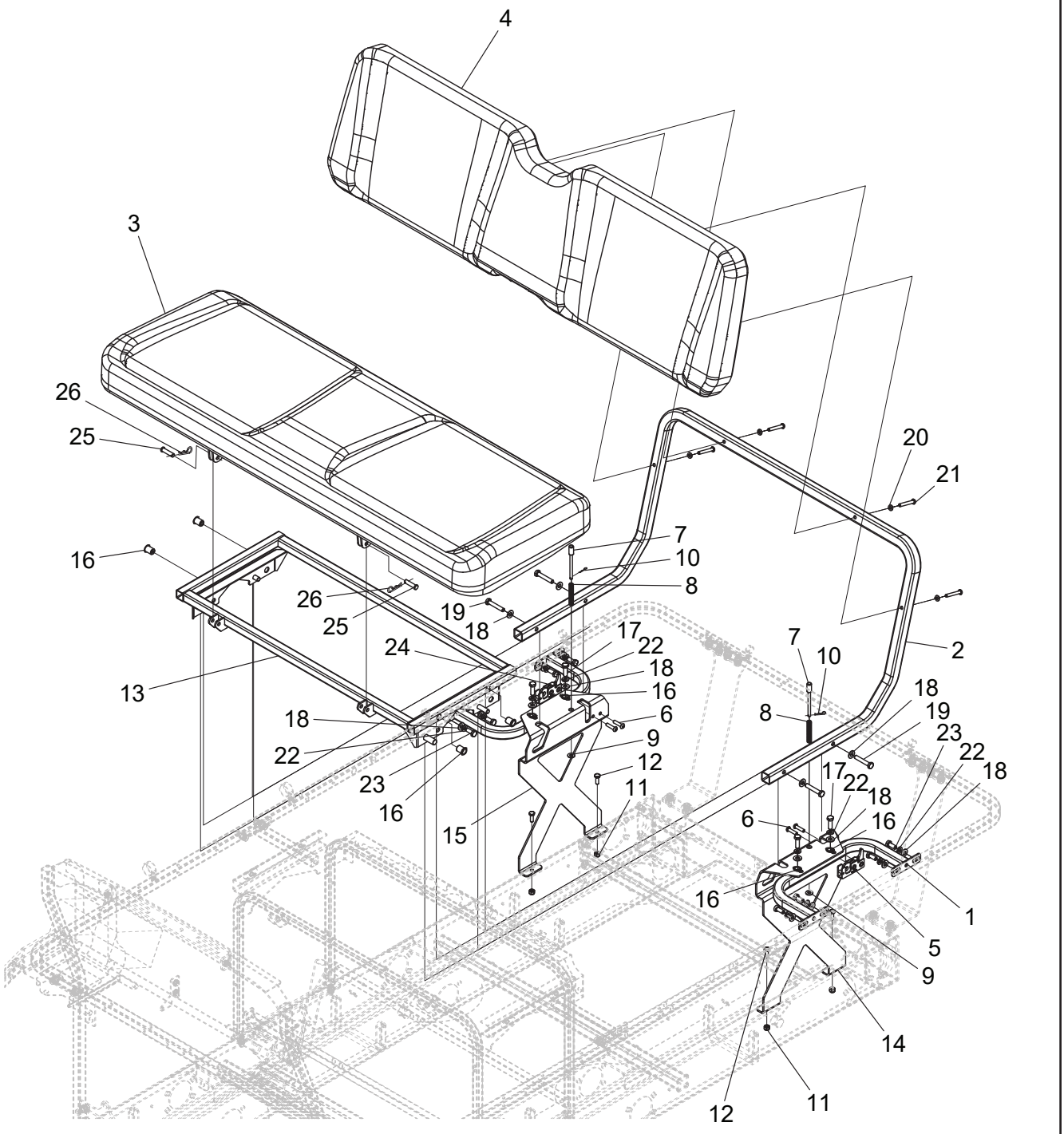
4
3
26
25
16
26
25
19
18
7
10
8
24
17
22
18
16
6
9
12
11
15
13
18
22
23
16
20
21
2
7
10
8
18
19
23
22
18
17
22
18
16
6
16
1
5
9
14
12
11

Ref.	Qty.	Part #	Description
1	2	10401C	Wldt, Rear Seat Side Support
2	1	10341C	Tube, Backrest Frame
3	1	10339C	Seat, Bench - Formed
4	1	10340C	Seat, Backrest - Formed
5	1	10404C	Rotary Latch - Left
6	4	10153A100	BHCS,1/4-20-1 Gr5 Bnz
7	2	10406C	Pin, Rear Seat Popper
8	2	10407C	Spring, Compression - Rear Seat
9	2	108-08	Washer .28x.62x.07 Zn
10	2	10171A001	Pin, Hairpin Ø0.042 3/16-1/4 Shaft ZP
11	4	117-27	Locknut, Nylon 1/4-20 Zn
12	4	112-04	HHCS 1/4-20x3/4 Gr5 Zn
13	1	10408C	Wldt, Rear Seat Base
14	1	10412C	Brkt, Rear Seat Side Spprt - Left
15	1	10413C	Brkt, Rear Seat Side Spprt - Right
16	8	10055A001	Insert Nut, 5/16-18 UNC
17	4	103-06	HHCS 5/16-18x1.0 Gr5 Zn
18	16	108-24	Washer .34x.70x.06 Zn
19	4	112-27	HHCS 5/16-18x1.75 Gr5 Zn
20	4	108-03	Lockwasher 1/4 Split Ring Zn
21	4	10156A045	BHCS, M6x1.0x45 Gr8.8 Bnz
22	12	108-05	Lockwasher 5/16 Split-Ring Bnz
23	8	112-01	HHCS 5/16-18x3/4 Gr5 Zn
24	1	10403C	Rotary Latch - Right
25	2	10077A001	Pin, Clevis 5/16x1.25 Zn
26	2	10171A002	Pin, Hairpin Ø0.093 1/4-5/16 Shaft ZP

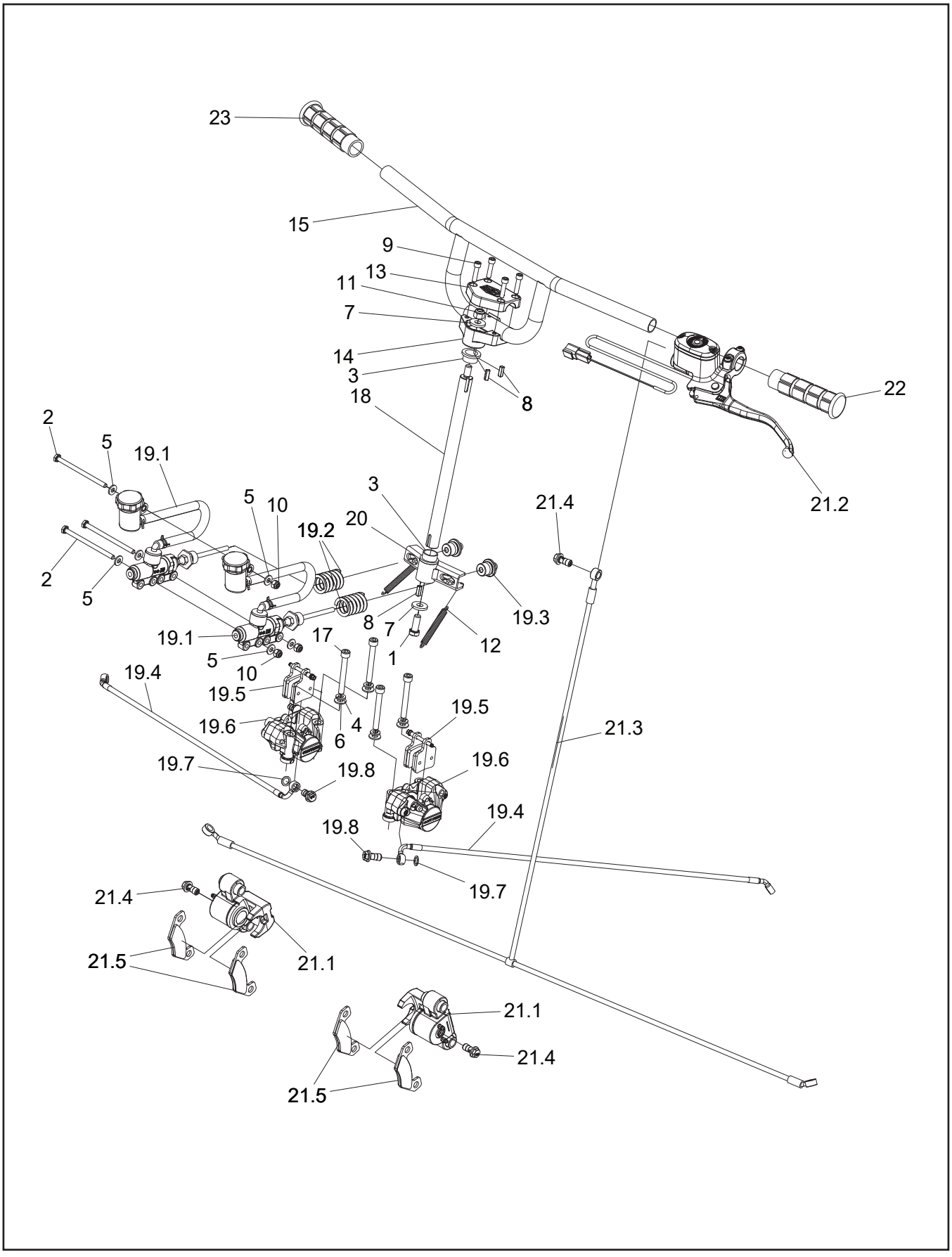
23
15
9
13
11
7
14
3
8
18
22
21.2
2
5
19.1
3
5
10
19.2
20
21.4
2
5
19.3
19.1
17
8
7
12
1
5
10
19.4
19.5
19.5
19.6
4
6
21.3
19.7
19.8
19.6
19.4
19.8
19.7
21.4
21.5
21.1
21.1
21.4
21.5

Ref.	Qty.	Part #	Description
1	1	103-17	HHCS 3/8-16x1.0 Gr5 Bnz
2	3	103-66	HHCS 1/4-20x4.0 GR5 Zn
3	2	105-16	Bushing, Oilite - 3/4 X 1/2
4	4	108-05	Lockwasher 5/16 Split-Ring Bnz
5	6	108-08	Washer .28x.62x.07 Zn
6	4	108-24	Washer .34x.70x.06 Zn
7	2	108-47	Washer .39x.94x.13 Zn Di-Chro
8	3	110-17	Key, 3/16 x 3/16 x .625
9	4	112-47	SHCS 1/4-20x1.0 Zn
10	3	117-27	Locknut, Nylon 1/4-20 Zn
11	1	117-29	Locknut, Nylon 3/8-16 Zn
12	2	127-194	Spring, Ext .360 x 3.0
13	1	612-105RM	Clamp, Upper Handlebar-RM
14	1	612-106	Clamp, Lower Handlebar
15	1	612-107	Handlebar Asm
17	4	10103A065	SHCS,M8x1.25x65 Gr12.9 Zn
18	1	10311C	Shaft, Steering
19.1	2	10578C	RMCI Assembly, Admiral
19.2	2	10371C	Steer Spring
19.3	2	10372C	Spring Bullnose
19.4	2	10323C	Brakeline RMCI To Steer Caliper
19.5	2	10374C	Brake Pads & Pim - Steer Brakes
19.6	2	10375C	Steer Brake Caliper
19.7	8	10377C	Copper Washer
19.8	4	10378C	Banjo Bolt
20	1	10379C	Steering Arm
21.1	2	10382C	Service Brake Caliper
21.2	1	10577C	Handle Bar Brake Lever/ Master Cylinder, 1/2"
21.3	1	10384C	Brake Line Service
21.4	3	10378C	Banjo Bolt
21.5	4	10383C	Caliper, Service
22	1	10507C	Handle Bar Grip, Left
23	1	10508C	Handle Bar Grip, Right

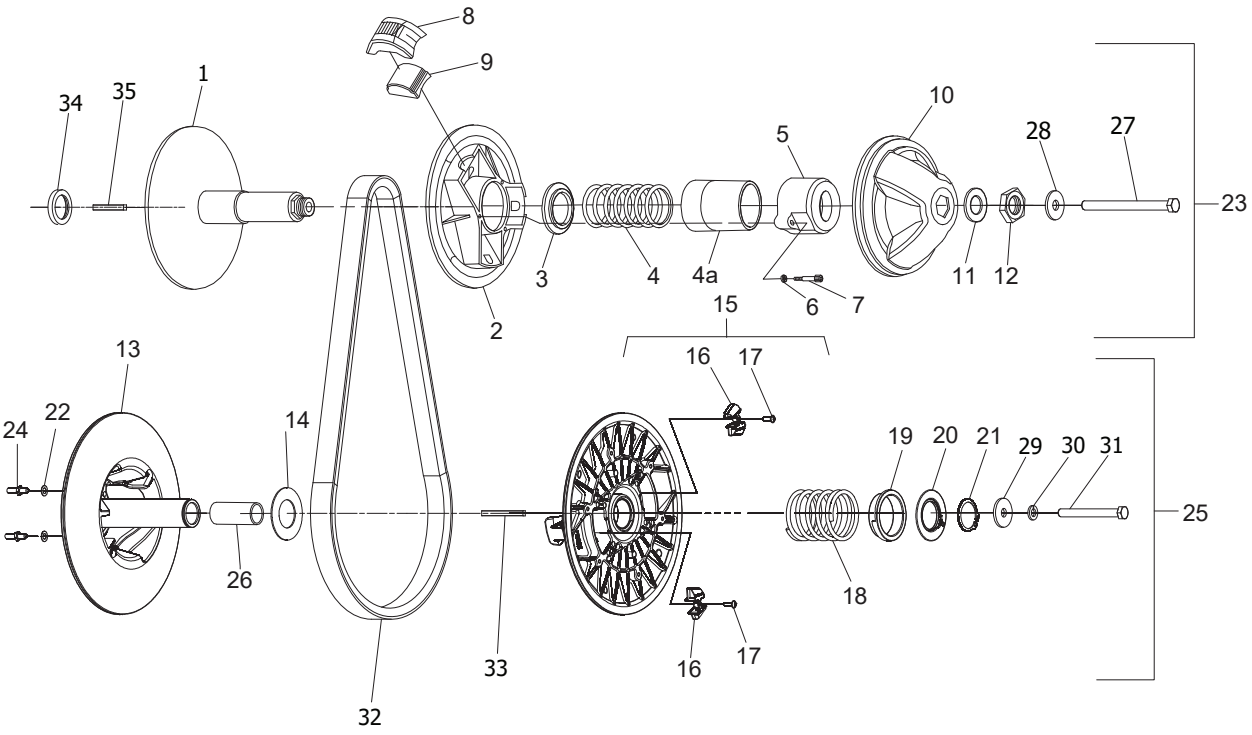

* Note: For High Elevation Operation (above 3000 ft) see Bulletin NP #5 regarding Clutch Weight Sets.

Ref.	Qty.	Part #	Description
1	1	0405-0138	Flange, Fixed
2	1	0410-0033	Flange, Sliding
3	1	0150-1014	Spring Guide Washer
4	1	1151-1114	Spring
4a	1	0450-3002	Guide, Spring
5	1	0440-0005	Spring Cover
6	3	0080-0167	Lockwasher
7	3	0080-0021	Screw, Cap
8	3	0130-3012	Block
9	3	0135-3061	Weight (230gr) - EFI Model
	3	0135-3065	Weight (275gr)
	1	127-208	Weight Set (3), 185g - High Elevation (*See Note)
	1	127-209	Weight Set (3), 220g - High Elevation (*See Note)
	1	127-210	Weight Set (3), 240g - High Elevation (*See Note)
10	1	0115-2061	Cap
11	1	0080-0804	Washer, Zn
12	1	V16J1	Nut
13	1	5905-0003	Flange, Fixed
14	1	0080-0164	Washer, Shim
15	1	5910-0002	Flange, Sliding
16	3	5930-3001	Cam Shoe
17	2	0080-0031	Screw
18	1	5951-1009	Spring
19	1	5950-3003	Spring Protector
20	1	5950-3002	Spring Support
21	1	0080-0216	Retaining Ring, Outside
22	2	0080-0167	Lockwasher
23	1	610-128	Clutch, Driver - EFI Models
24	2	0080-0035	Screw & Nut Ass'y
25	1	127-156	Clutch, Driven - Invance
26	1	5940-2001	Keyway Stopper
27	1	112-160	HHCS 7/16-20x5.0 Lg
28	1	108-58	Washer .156x.375x.047 Zn
29	1	108-46	Washer .40x1.37x.12 Hi-Carbon
30	1	108-06	Lockwasher 3/8 Split-Ring Bnz
31	1	112-164	HHCS 3/8-16x3.5 Gr5 Zn
32	1	127-137HD	Drive Belt - AVG/HDi -Hvy Duty
	or	127-137	Drive Belt - Avenger
33	1	110-03	Key 1/4x3/16x2.375 RC46
34	1	108-84	Washer, Engine, Clutch
35	1	110-18	Key, 1/4 x 1/4 x 1 3/4 45RC

TORQUE & LOCTITE SPECIFICATIONS			
ITEM	PART#	LOCTITE	TORQUE (ft-lbs)
10	34-258	243 BLUE	N/A
12	34-262	609 GREEN	N/A
26	103-02	592	15
27	103-41	N/A	45
28	103-60	243 BLUE	40
41	112-18	N/A	20
42	112-47	243 BLUE	16
43	112-143	N/A	20
44	112-184	N/A	10

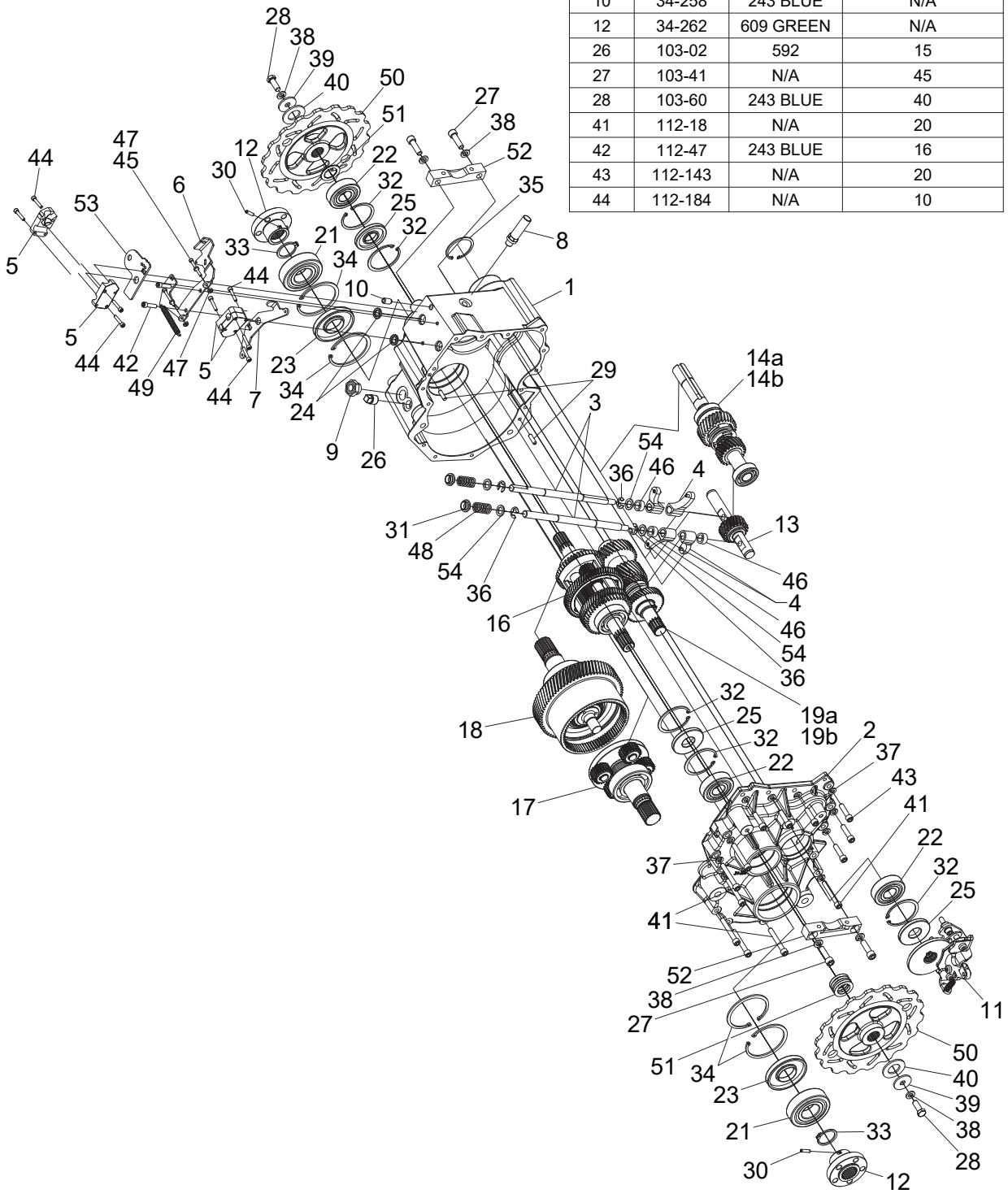

Ref.	Qty. (6.2)	Qty. (8.1)	Part #	Description
1	1	1	34-227	Housing, Transmission
2	1	1	34-228	Cover, Transmission
3	2	2	34-231	Shaft, Shift - F-N-R
4	4	4	34-232	Fork, Shift - Half
5	4	4	34-236	Clamp, Lever Shaft
6	1	1	34-241	Bracket, Switch, Spring Mount
7	1	1	34-242	Bracket, Spring Mount
8	1	1	34-245	Plug, Fill/Vent 1/4 BSPP
9	1	1	34-251	Sight Glass, Aluminum, 1/2 BSP
10	1	1	34-258	Plunger, Ball-Nose Spring
11	1	1	34-261	Brake, Caliper Asy
12	2	2	34-262	Coupler, Output Shaft, Pinned
13	1	1	34-290	Asm, Reverse Shaft-Adm
14A	1	0	34-291-6.4	Asm, Input Shaft - Adm
14B	0	1	34-291-8.4	Asm, Input Shaft - Adm
16	1	1	34-292	Asm, Differential - Adm
17	1	1	34-293	Asm, Output Shaft RH - Adm
18	1	1	34-294	Asm, Output Shaft LH - Adm
19A	1	0	34-295-6.4	Asm, Idler Shaft - Adm
19B	0	1	34-295-8.4	Asm, Idler Shaft - Adm
21	2	2	101-81	Bearing, Ball 6307 Zze
22	3	3	101-86	Bearing, Ball 6305 Zz
23	2	2	102-33	Seal, Oil 35x80x10
24	2	2	102-36	Seal, Shift Shaft - 0.5x.75x.125
25	3	3	102-37	Seal, Oil 25x62x7
26	1	1	103-02	Plug, Magnetic 3/8-18NPT Sq.Hd
27	4	4	103-41	SHCS 3/8-16x1.25 Zn
28	2	2	103-60	HHCS 3/8-24 x 1 Gr5
29	2	2	104-03	Pin, Dowel 1/4x7/8
30	2	2	104-75	Pin, Spring, 3/16X13/16 Zn
31	2	2	105-33	Bushing, Flange
32	5	5	106-05	Retaining Ring HO-244-PA
33	2	2	106-23	Retaining Ring SHR-0137-PA
34	4	4	106-24	Retaining Ring H0-312-PA
35	1	1	106-26	Retaining Ring H0-206-PA
36	4	4	106-30	Retaining Ring E-0050 E
37	10	10	108-05	Lockwasher 5/16 Split-Ring Zn
38	6	6	108-06	Lockwasher 3/8 Split-Ring Zn
39	2	2	108-18	Washer .40x1.37x.12 Zn
40	2	2	108-72	Washer .94x1.75x.125 Zn
41	7	7	112-18	SHCS 5/16-18x2.25
42	2	2	112-47	SHCS 1/4-20x1.0 Zn
43	6	6	112-143	SHCS 5/16x1.25 Zn
44	8	8	112-184	SHCS, 10-32x1
45	2	2	112-195	SHCS 8-32 x 1.5 Stainless
46	3	3	114-21	Spacer, .51x.75x.36
47	4	4	117-92	Nut, Hex Machine #8-32 Zn
48	2	2	127-186	Spring, Comp. 0.70x1.28
49	1	1	127-194	Spring, Ext .360 x 3.0
50	2	2	165-22	Disc, Brake
51	2	2	10174A	Shim, Round Imperial
52	2	2	10307C	Mount, Brake Caliper
53	1	1	10532C	Plate, Detent - Shifter
54	4	4	12731594	Washer, Flat 13,0 x 20,0 x 2,0

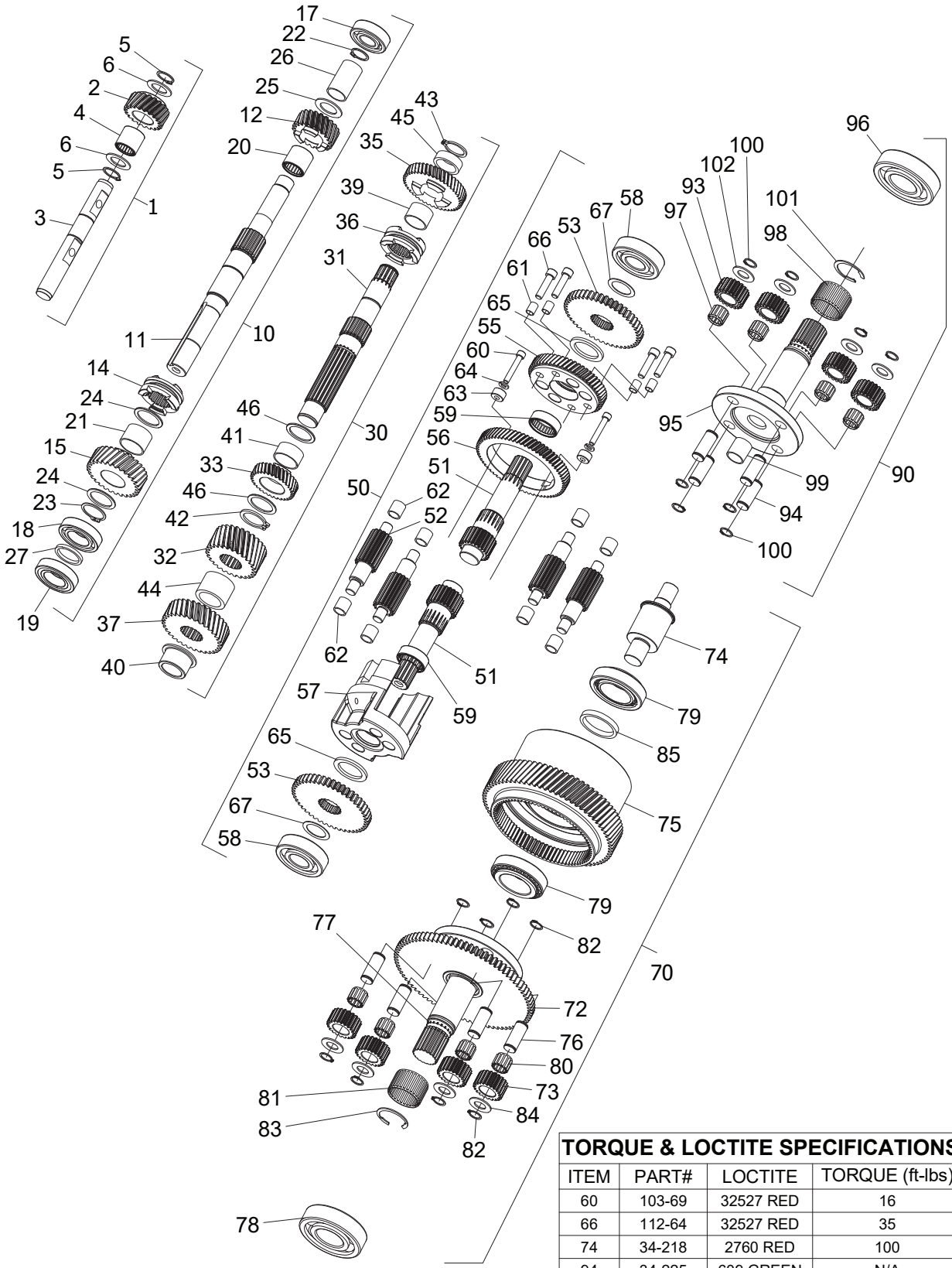

TORQUE & LOCTITE SPECIFICATIONS			
ITEM	PART#	LOCTITE	TORQUE (ft-lbs)
60	103-69	32527 RED	16
66	112-64	32527 RED	35
74	34-218	2760 RED	100
94	34-225	609 GREEN	N/A

Ref.	Qty.	Part #	Description
1	**1**	**34-290**	**Asm, Reverse Shaft - Adm. includes:**
2	1	34-220	Pinion, Idler - 20T
3	1	34-221	Shaft, Shift - Reverse
4	1	101-87	Bearing, Needle HMK20x27x25
5	2	106-25	Retaining Ring SH-0078-PA
6	2	108-99	Washer, Thrust .79x1.25x.06
10	**1**	**34-291-6.4**	**Asm, Input Shaft includes:**
11	1	34-213	Shaft, Input
12	1	34-214	Pinion, Reverse - 21T, 12DP
14	1	34-224	Collar, Shift, For-Rev
15	1	34-247	Pinion, Forward - 29T, 12DP
17	1	101-01	Bearing, Ball 6204Z-C3
18	1	101-88	Bearing, Ball 60/28
19	1	101-89	Bearing, Ball 60/28 LLU
20	1	101-90	Bearing, Needle HK2220
21	1	105-32	Bushing, Bronze 1.125x1.25x.875
22	1	106-25	Retaining Ring SH-0078-PA
23	1	106-27	Retaining Ring SH-112-PA
24	2	108-98	Washer, Thrust 1.13x1.46x.062
25	1	114-17	Washer, Thrust .866x1.38x.062
26	1	114-18	Spacer, .870x1.0x1.68
27	1	114-19	Spacer, 1.12x1.375x.148
30	**1**	**34-295-6.4**	**Asm, Idler Shaft includes:**
31	1	34-208	Shaft, Idler
32	1	34-209	Pinion, Helical - 27T 12 DP
33	1	34-210	Pinion, Helical - 31T
35	1	34-212	Pinion, Helical - 45T
36	1	34-223	Collar, Shift, Hi-Low
37	1	34-246	Gear, Helical - 33T
39	1	105-29	Bushing, Oilite 1.0x1.125x.75
40	1	105-30	Bushing, Flanged 1x1.375
41	1	105-31	Bushing, Bronze 1.125x1.25x.62
42	1	106-28	Retaining Ring SHR-0112-PA
43	1	107-15	Retaining Ring SHR-98-PA
44	1	108-96	Spacer, 1.125x1.5x1.083
45	1	108-97	Spacer, 1.01x1.3x.409
46	2	108-98	Washer, Thrust 1.13x1.46x.062
50	**1**	**34-292-HS**	**Asm, Differential - Adm. includes:**
51	2	34-201	Gear, Planet - 15T
52	4	34-202	Shaft, Brake
53	2	34-203	Pinion, Spur - 46T
54	2	34-203-HS	Pinion, Spur - 43T
55	1	34-204	Gear, Helical - 55T
56	1	34-205	Gear, Helical - 67T
57	1	34-206	Cage, Differential
58	2	101-40	Bearing, Ball 6305 Open
59	2	101-84	Bearing, Needle HK3012
60	2	103-69	SHCS 1/4-20x1.5 Zn

Ref.	Qty.	Part #	Description
61	4	105-23	Bushing, Dowel - .312 x .5
62	8	105-27	Bushing, Oilite .5x.625x.625
63	2	105-28	Bushing, Dowel .26x.625x.36
64	2	108-03	Lockwasher 1/4 Split Ring Zn
65	2	108-94	Washer, Thrust 1.25x1.688 x.125
66	4	112-64	SHCS 5/16-18x1.25
67	2	114-16	Washer, Shim.99x1.375x.030
70	**1**	**34-294-HS**	**Asm, Output Shaft LH-Adm. includes:**
72	1	34-207-HS	Gear, Sun - 84T, 35T
73	4	34-217	Gear, Planet - 21T
74	1	34-218	Shaft, Planetary Stub
75	1	34-219	Hub, Planetary, 73T, 79T
76	4	34-225	Pin, Planet Carrier
77	1	34-263	Carrier Shaft, Grooved LH
78	1	101-73	Bearing, Ball 6307 CL.N.
79	2	101-76	Bearing, Taperd Roller 32008X
80	4	101-82	Bearing, Needle K15x21x17
81	1	101-83	Bearing, Needle KJ37x42x27S
82	8	106-22	Retaining Ring SH-0056-PA
83	1	106-31	Retaining Ring C-0137
84	4	108-93	Washer, .59x1.10x.06
85	1	114-22	Spacer, 1.585x1.75x.245
90	**1**	**34-293-HS**	**Asm, Output Shaft RH - Adm. includes:**
92	1	34-207-HS	Gear, Sun - 84T, 35T
93	4	34-217	Gear, Planet - 21T
94	4	34-225	Pin, Planet Carrier
95	1	34-264	Carrier Shaft, Grooved RH
96	1	101-73	Bearing, Ball 6307 CL.N.
97	4	101-82	Bearing, Needle K15x21x17
98	1	101-83	Bearing, Needle KJ37x42x27S
99	1	105-26	Bushing, Oilite .75x.875x.875
100	8	106-22	Retaining Ring SH-0056-PA
101	1	106-31	Retaining Ring C-0137
102	4	108-93	Washer, .59 x 1.10 x .060

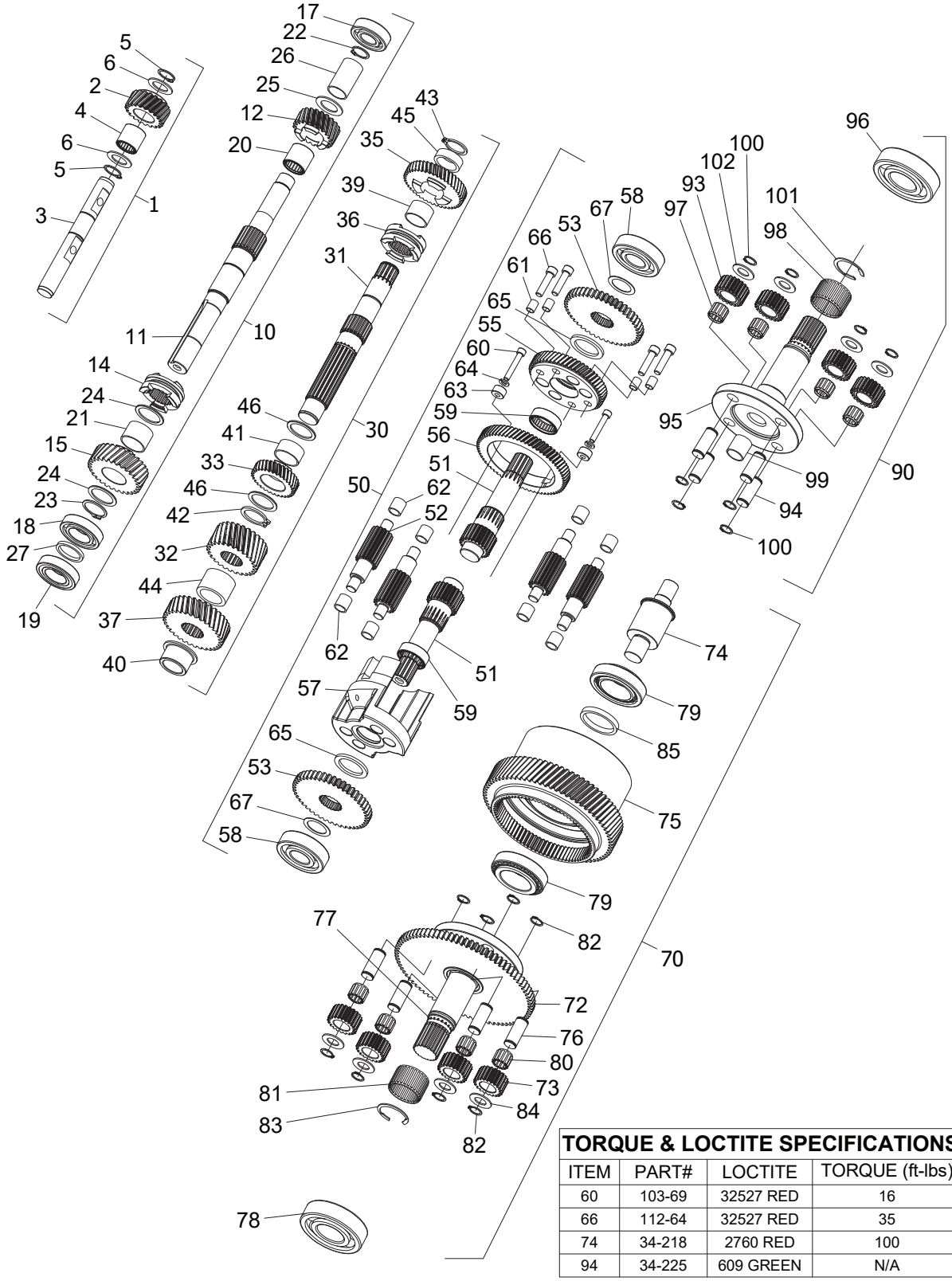

TORQUE & LOCTITE SPECIFICATIONS			
ITEM	PART#	LOCTITE	TORQUE (ft-lbs)
60	103-69	32527 RED	16
66	112-64	32527 RED	35
74	34-218	2760 RED	100
94	34-225	609 GREEN	N/A

Ref.	Qty.	Part #	Description
1	**1**	**34-290**	**Asm, Reverse Shaft - Adm. includes:**
2	1	34-220	Pinion, Idler - 20T
3	1	34-221	Shaft, Shift - Reverse
4	1	101-87	Bearing, Needle HMK20x27x25
5	2	106-25	Retaining Ring SH-0078-PA
6	2	108-99	Washer, Thrust .79x1.25x.06
10	**1**	**34-291-6.4**	**Asm, Input Shaft includes:**
11	1	34-213	Shaft, Input
12	1	34-214	Pinion, Reverse - 21T, 12DP
14	1	34-224	Collar, Shift, For-Rev
16	1	34-249	Pinion, Forward - 25T, 12DP
17	1	101-01	Bearing, Ball 6204Z-C3
18	1	101-88	Bearing, Ball 60/28
19	1	101-89	Bearing, Ball 60/28 LLU
20	1	101-90	Bearing, Needle HK2220
21	1	105-32	Bushing, Bronze 1.125x1.25x.875
22	1	106-25	Retaining Ring SH-0078-PA
23	1	106-27	Retaining Ring SH-112-PA
24	2	108-98	Washer, Thrust 1.13x1.46x.062
25	1	114-17	Washer, Thrust .866x1.38x.062
26	1	114-18	Spacer, .870x1.0x1.68
27	1	114-19	Spacer, 1.12x1.375x.148
30	**1**	**34-295-6.4**	**Asm, Idler Shaft includes:**
31	1	34-208	Shaft, Idler
32	1	34-209	Pinion, Helical - 27T 12 DP
33	1	34-210	Pinion, Helical - 31T
35	1	34-212	Pinion, Helical - 45T
36	1	34-223	Collar, Shift, Hi-Low
38	1	34-248	Gear, Helical - 37T
39	1	105-29	Bushing, Oilite 1.0x1.125x.75
40	1	105-30	Bushing, Flanged 1x1.375
41	1	105-31	Bushing, Bronze 1.125x1.25x.62
42	1	106-28	Retaining Ring SHR-0112-PA
43	1	107-15	Retaining Ring SHR-98-PA
44	1	108-96	Spacer, 1.125x1.5x1.083
45	1	108-97	Spacer, 1.01x1.3x.409
46	2	108-98	Washer, Thrust 1.13x1.46x.062
50	**1**	**34-292-HS**	**Asm, Differential - Adm. includes:**
51	2	34-201	Gear, Planet - 15T
52	4	34-202	Shaft, Brake
53	2	34-203	Pinion, Spur - 46T
54	2	34-203-HS	Pinion, Spur - 43T
55	1	34-204	Gear, Helical - 55T
56	1	34-205	Gear, Helical - 67T
57	1	34-206	Cage, Differential
58	2	101-40	Bearing, Ball 6305 Open
59	2	101-84	Bearing, Needle HK3012
60	2	103-69	SHCS 1/4-20x1.5 Zn
61	4	105-23	Bushing, Dowel - .312 x .5
62	8	105-27	Bushing, Oilite .5x.625x.625
63	2	105-28	Bushing, Dowel .26x.625x.36
64	2	108-03	Lockwasher 1/4 Split Ring Zn
65	2	108-94	Washer, Thrust 1.25x1.688 x.125
66	4	112-64	SHCS 5/16-18x1.25
67	2	114-16	Washer, Shim.99x1.375x.030
70	**1**	**34-294-HS**	**Asm, Output Shaft LH-Adm. includes:**
72	1	34-207-HS	Gear, Sun - 84T, 35T
73	4	34-217	Gear, Planet - 21T
74	1	34-218	Shaft, Planetary Stub
75	1	34-219	Hub, Planetary, 73T, 79T
76	4	34-225	Pin, Planet Carrier
77	1	34-263	Carrier Shaft, Grooved LH
78	1	101-73	Bearing, Ball 6307 CL.N.
79	2	101-76	Bearing, Taperd Roller 32008X
80	4	101-82	Bearing, Needle K15x21x17
81	1	101-83	Bearing, Needle KJ37x42x27S
82	8	106-22	Retaining Ring SH-0056-PA
83	1	106-31	Retaining Ring C-0137
84	4	108-93	Washer, .59x1.10x.06
85	1	114-22	Spacer, 1.585x1.75x.245
90	**1**	**34-293-HS**	**Asm, Output Shaft RH - Adm. includes:**
92	1	34-207-HS	Gear, Sun - 84T, 35T
93	4	34-217	Gear, Planet - 21T
94	4	34-225	Pin, Planet Carrier
95	1	34-264	Carrier Shaft, Grooved RH
96	1	101-73	Bearing, Ball 6307 CL.N.
97	4	101-82	Bearing, Needle K15x21x17
98	1	101-83	Bearing, Needle KJ37x42x27S
99	1	105-26	Bushing, Oilite .75x.875x.875
100	8	106-22	Retaining Ring SH-0056-PA
101	1	106-31	Retaining Ring C-0137
102	4	108-93	Washer, .59 x 1.10 x .060

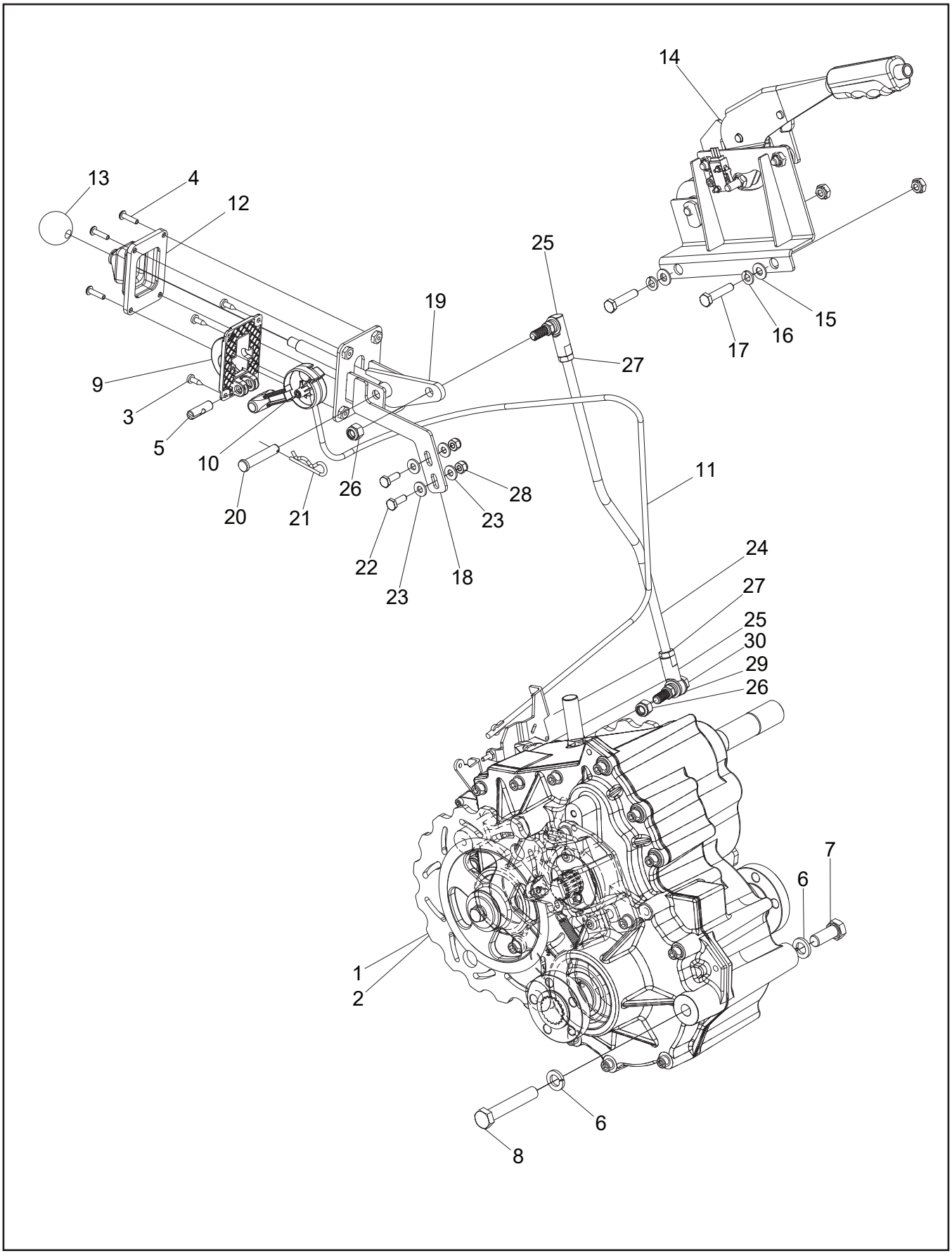
14
13
4
12
25
19
15
16
17
27
9
3
5
10
26
28
11
20
21
23
22
23
18
24
27
25
30
29
26
7
6
1
2
6
8

Ref.	Qty. (6.2)	Qty. (8.1)	Part #	Description
1	1	0	34-200-6.2-FG	Transmission, 6.2
2	0	1	34-200-8.1-Fg	Transmission, 8.1
3	4	4	103-48	T/S Pan HD Phil #10x5/8 A Blk
4	4	4	103-25	PHMS 10-24x3/4 Zn
5	1	1	500-0002	Toggle, Shift Cable
6	4	4	108-107	Lockwasher 1/2 Split-Ring Zn
7	2	2	112-189	HHCS 1/2-13x1.25 Gr5 Zn
8	2	2	112-190	HHCS 1/2-13x3.00 Gr5 Zn
9	1	1	127-211	Bracket, Hi-Lo Shifter
10	1	1	127-212	Pivot, Hi-Lo Shifter
11	1	1	500-0001	Cable, Shift
12	1	1	10244C	Boot - Dash Shift
13	1	1	10230C	Knob - Shifter
14	1	1	10362C	Asm, Park Brake
15	2	2	108-24	Washer .34x.70x.06 Zn
16	2	2	108-05	Lockwasher 5/16 Split-Ring Bnz
17	2	2	103-57	HHCS 5/16-18x1.5 Gr5 Bnz
18	1	1	10534C	Wldt, Shifter Gate
19	1	1	10535C	Wldt, Shift Lever
20	1	1	104-46	Pin, Clevis, 3/8x2, Zn
21	1	1	104-68	Hairpin, Cotter 1/2-3/4 Dia
22	2	2	112-04	HHCS 1/4-20x3/4 Gr5 Zn
23	4	4	108-08	Washer .28x.62x.07 Zn
24	1	1	10531C	Shaft, Shifter Linkage
25	2	2	200-0000-003	Rod End, Female - 3/8-24
26	2	2	117-24	Locknut, Nylon 3/8-24 Zn
27	2	2	117-68	Nut, Jam 3/8-24UNF, Zn
28	2	2	117-27	Locknut, Nylon 1/4-20 Zn
29	4	4	108-101	Washer, 0.41x0.79x0.08, Bnz
30	2	2	103-82	HHCS 3/8-16x1.5 Gr5 Bnz

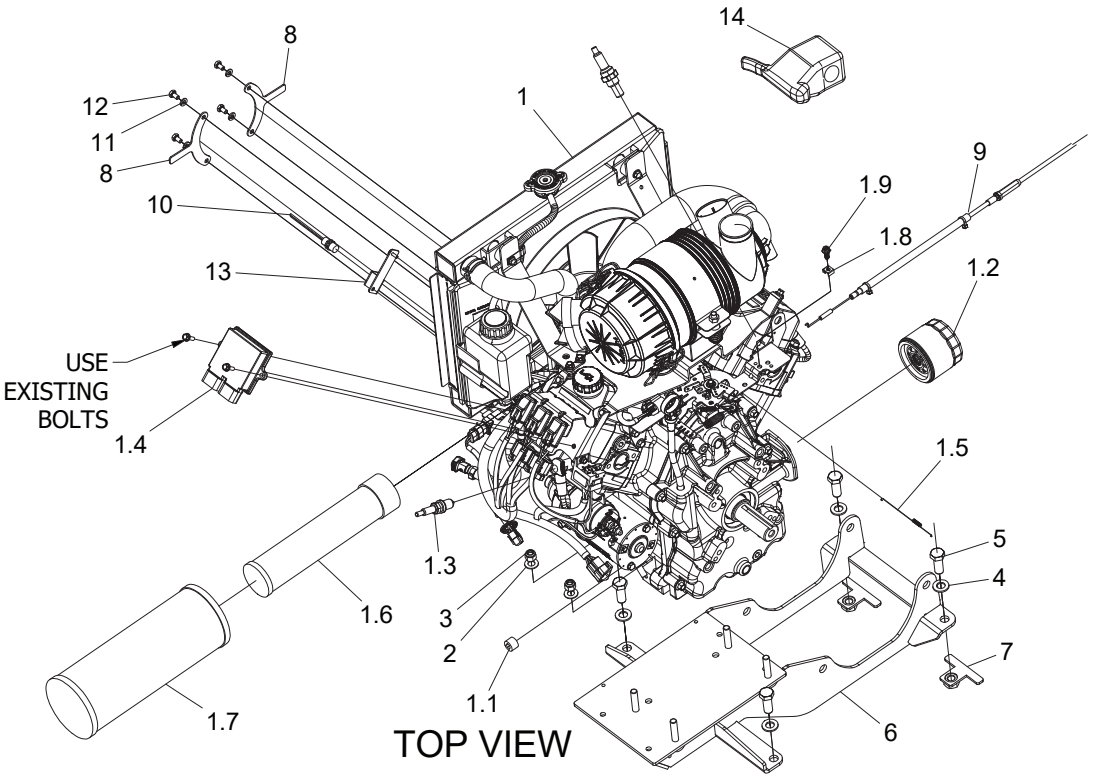

TOP VIEW

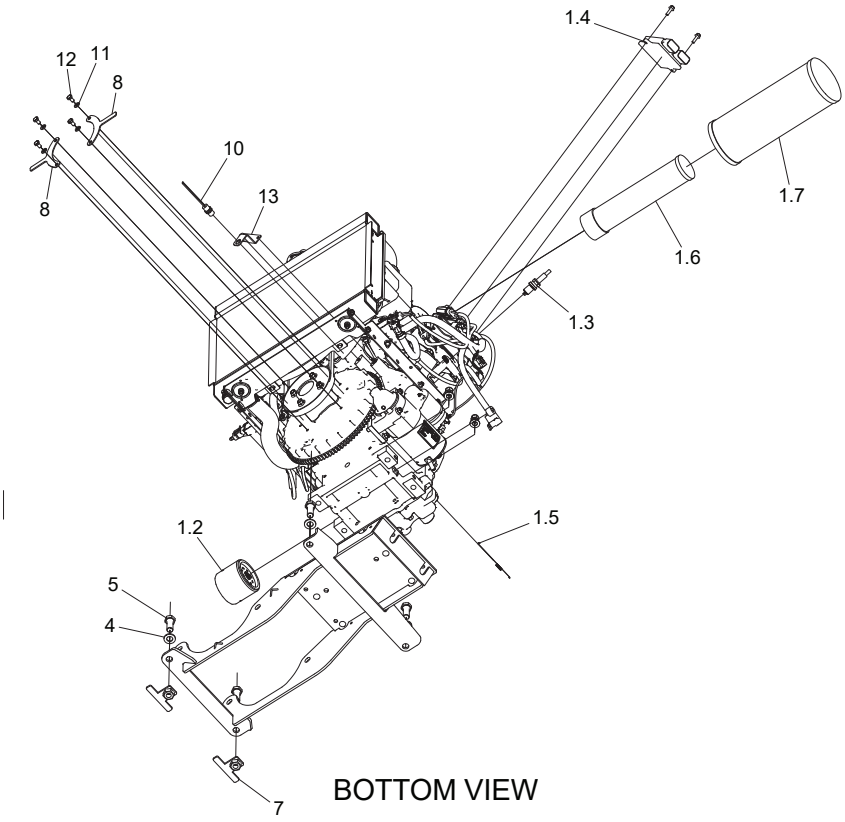

BOTTOM VIEW

Ref.	Qty.	Part #	Description
1	1	ELH775	Engine, Kohler 747cc EFI
1.1	2	25 139 62	Plug, Oil
1.2	1	12 050 01	Filter, Oil - Kohler
1.3	2	127-193	Spark Plug, RC14YC
1.4	1	66 584 15	ECU (c/w engine)
1.5	1	24 089 01	Spring, Linkage
1.6	1	25 083 04	Filter, Air Inner - Kohler
1.7	1	25 083 01	Filter, Air Outer - Kohler
1.8	1	12 237 01	Clamp, Cable
1.9	1	25 086 398	HFHS, M5x0.8x16mm
1.10	1	25 418 07	Sensor, Oxygen (M18 x 1.5 Thread)
2	4	108-15	Washer .42x.81x.05 Zn
3	4	117-29	Locknut, Nylon 3/8-16 Zn
4	4	108-103	Washer, 0.51x0.94x0.10, Zn
5	4	112-189	HHCS 1/2-13x1.25 Gr5 Zn
6	1	10155C	Engine Mount Assy - Kohler
7	2	10255C	Wldt, Powerpack Nut
8	2	10305C	Plate, Flywheel Sensor
9	1	10040C	Cable, Throttle - Finger
10	1	10011B	Sensor, Speed
11	4	108-03	Lockwasher 1/4 Split Ring Zn
12	4	112-96	HHCS M6x1x10mm Zn
13	1	10720C	Wldt, Bracket - Rpm Sensor
14	1	10509C	Throttle, Finger

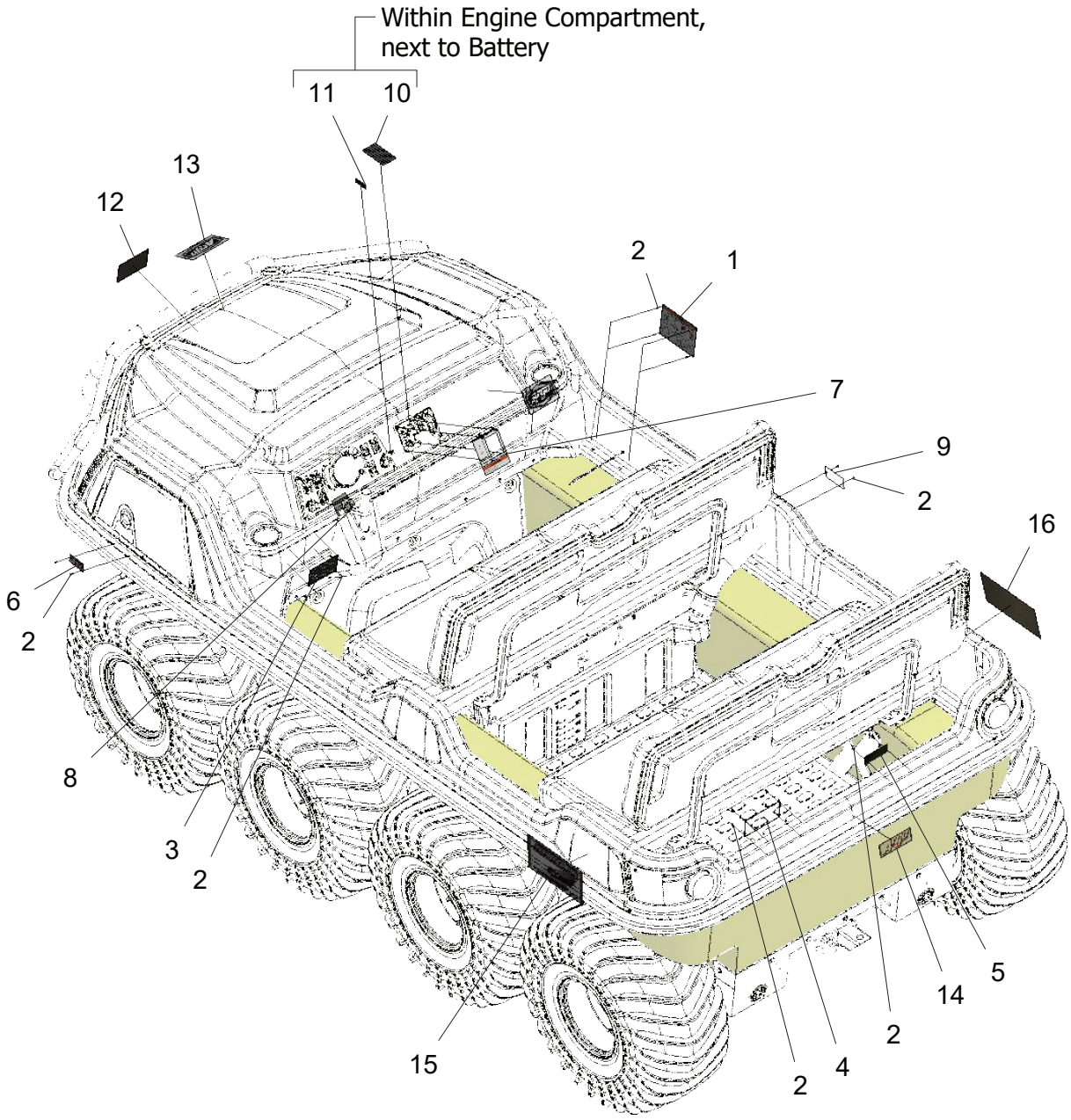
Within Engine Compartment,
next to Battery
11
10
13
12
2
1
7
9
2
16
6
2
8
3
2
15
2
4
2
14
5

LABELS GROUP, AURORA 8X8 (ENGLISH)			
Ref.	**Qty.**	**Part #**	**Description**
1	1	126-68	Plate, Operation
2	18	120-24	Rivet, Alum - 3/32 x 3/8 Black
3	1	129-08	Plate, Pin - Blank
4	1	129-09	Plate, Capacity - Blank
5	1	126-67	Plate, Floor Pan
6	1	10547C	Label, Warning Hot
7	1	10550C	Label, Fnr Shifter
8	1	10549C	Label, Ignition
9	1	10548C	Label, Fuel
10	1	10579C	Label, Fuse Panel
11	1	10585C	Label, Secondary Fuse Panel

MODEL GROUP, AURORA 800			
Ref.	**Qty.**	**Part #**	**Description**
12	2	10503C	Decal, Shield Domed
13	1	10610C	Decal, Argo Shield - Flat
14	1	10609C	Decal, Argo Logo - Rear
15	1	10599C	Decal, Aurora 800 - Left
16	1	10600C	Decal, Aurora 800 - Right

MODEL GROUP, AURORA 800 SX			
Ref.	**Qty.**	**Part #**	**Description**
12	1	10503C	Decal, Shield Domed
13	1	10610C	Decal, Argo Shield - Flat
14	1	10609C	Decal, Argo Logo - Rear
15	1	10601C	Decal, Aurora 800SX - Left
16	1	10602C	Decal, Aurora 800SX - Right

MODEL GROUP, AURORA 800 HUNTMASTER			
Ref.	**Qty.**	**Part #**	**Description**
12	1	10503C	Decal, Shield Domed
13	1	10610C	Decal - Argo Shield - Flat
14	1	10609C	Decal, Argo Logo - Rear
15	1	10605C	Decal, Aurora Hunt 800 - Left
16	1	10606C	Decal, Aurora Hunt 800 - Right

MODEL GROUP, AURORA 800 LIMITED			
Ref.	**Qty.**	**Part #**	**Description**
12	1	10503C	Decal, Shield Domed
13	1	10610C	Decal, Argo Shield - Flat
14	1	10609C	Decal, Argo Logo - Rear
15	1	10603C	Decal, Aurora 800LTD - Left
16	1	10604C	Decal, Aurora 800LTD - Right

MODEL GROUP, AURORA 950 SX			
Ref.	**Qty.**	**Part #**	**Description**
12	1	10503C	Decal, Shield Domed
13	1	10610C	Decal, Argo Shield - Flat
14	1	10609C	Decal, Argo Logo - Rear
15	1	10607C	Decal, Aurora 950SX - Left
16	1	10608C	Decal, Aurora 950SX - Right

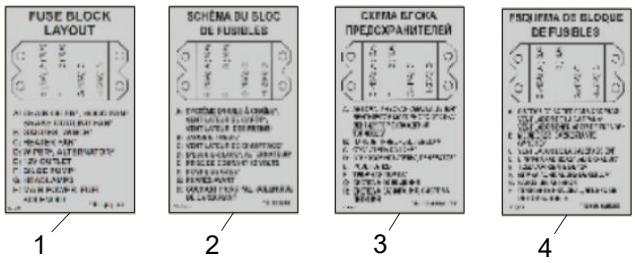
FUSE BLOCK LAYOUT
SCHÉMA DU BLOC DE FUSIBLES
СХЕМА БЛОКА ПРЕДОХРАНИТЕЛЕЙ
DIAGRAMA DE BLOQUE DE FUSIBLES
1
2
3
4

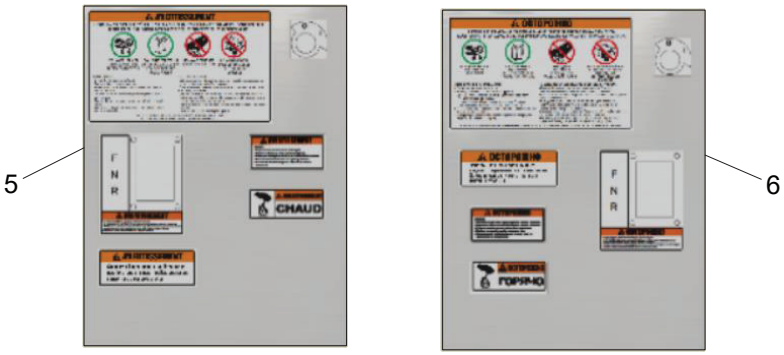
F
N
R
CHAUD
5
6

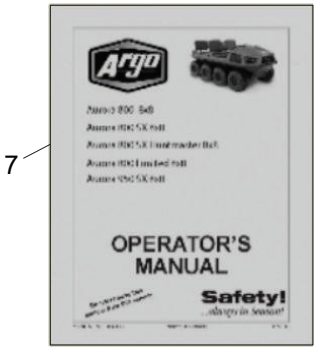
Argo
OPERATOR'S MANUAL
Safety!
7

FUSE PANEL LABELS - EN FR RU SP			
Ref.	**Qty.**	**Part #**	**Description**
1	1	127-298	Label, Fuse Panel, Argo
2	1	127-298FR	Label, Fuse Panel, Argo-FR
3	1	127-298RU	Label, Fuse Panel, Argo-RU
4	1	127-298SP	Label, Fuse Panel, Argo-SP

LABEL SHEETS - FR RU			
Ref.	**Qty.**	**Part #**	**Description**
5	1	10670C	Label Sheet, Aurora - French
6	1	10671C	Label Sheet, Aurora - Russian

OPERATOR'S MANUAL - EN			
Ref.	**Qty.**	**Part #**	**Description**
7	1	10690C	Operator's Manual, Aurora

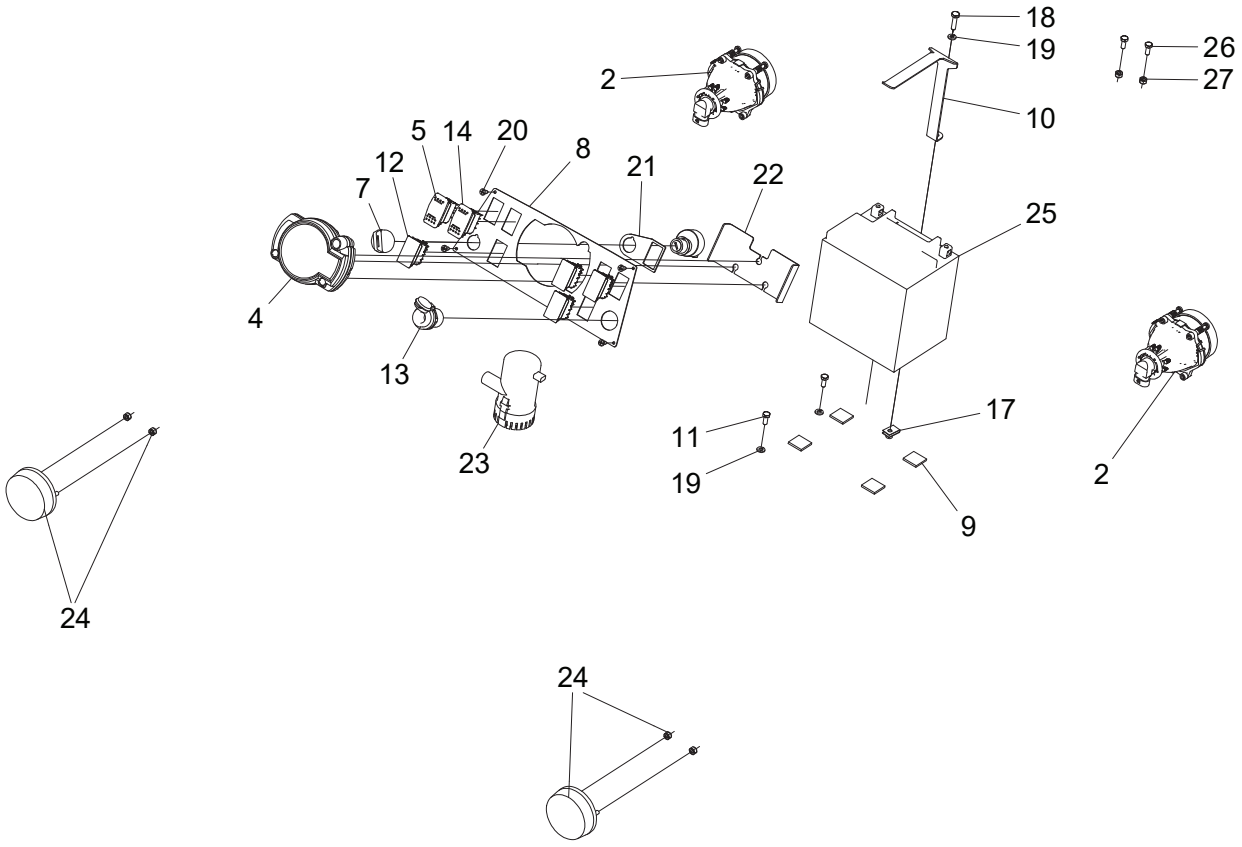
18
19
26
27
2
10
5
14
20
8
12
21
22
7
25
4
13
23
11
17
19
9
2
24
24

Ref.	Qty.	Part #	Description
1	1	10000B	Handle Switch, Left
2	2	10008B	Light, Low Beam
3	2	10009B	Light, High Beam
4	1	10010B	Gauge, Instrument Panel
5	1	613-288	Switch, Bilge Pump
6	1	10022C	Harness, Main
7	1	10006B	Switch, Ignition (includes keys)
8	1	10330C	Panel, Dash
9	4	10331C	Bumper, 1"x1" Adhesive Backed
10	1	10332C	Bracket, Tie Down
11	2	112-118	HHCS M6x1,0x15mm
12	4	10015B	Switch, Hole Plug
13	1	10016B	Outlet, 12 Volt
14	1	613-295	Switch, Winch
15	1	10328C	Cable, Battery Positive
16	1	10329C	Cable, Battery Negative
17	1	10056A002	Unut, 1/4-20 x .025-.150 PH
18	1	103-08	HHCS 1/4-20x1.0 Bnz
19	3	108-03	Lockwasher 1/4 Split Ring Zn
20	4	103-48	T/S Pan Hd Phil #10x5/8 A Blk
21	1	10425C	Spacer, Ignition
22	1	10527C	Bracket, Gauge Mount
23	1	10017B	Bilge Pump, With Connector
24	1	10007B	Light, Brake
25	1	10005B	Battery, YIX30L - 12V
26	2	112-212	HHCS M6x1x25mm, Black Zn
27	2	117-63	Nut, Hex M6x1,0 Zn

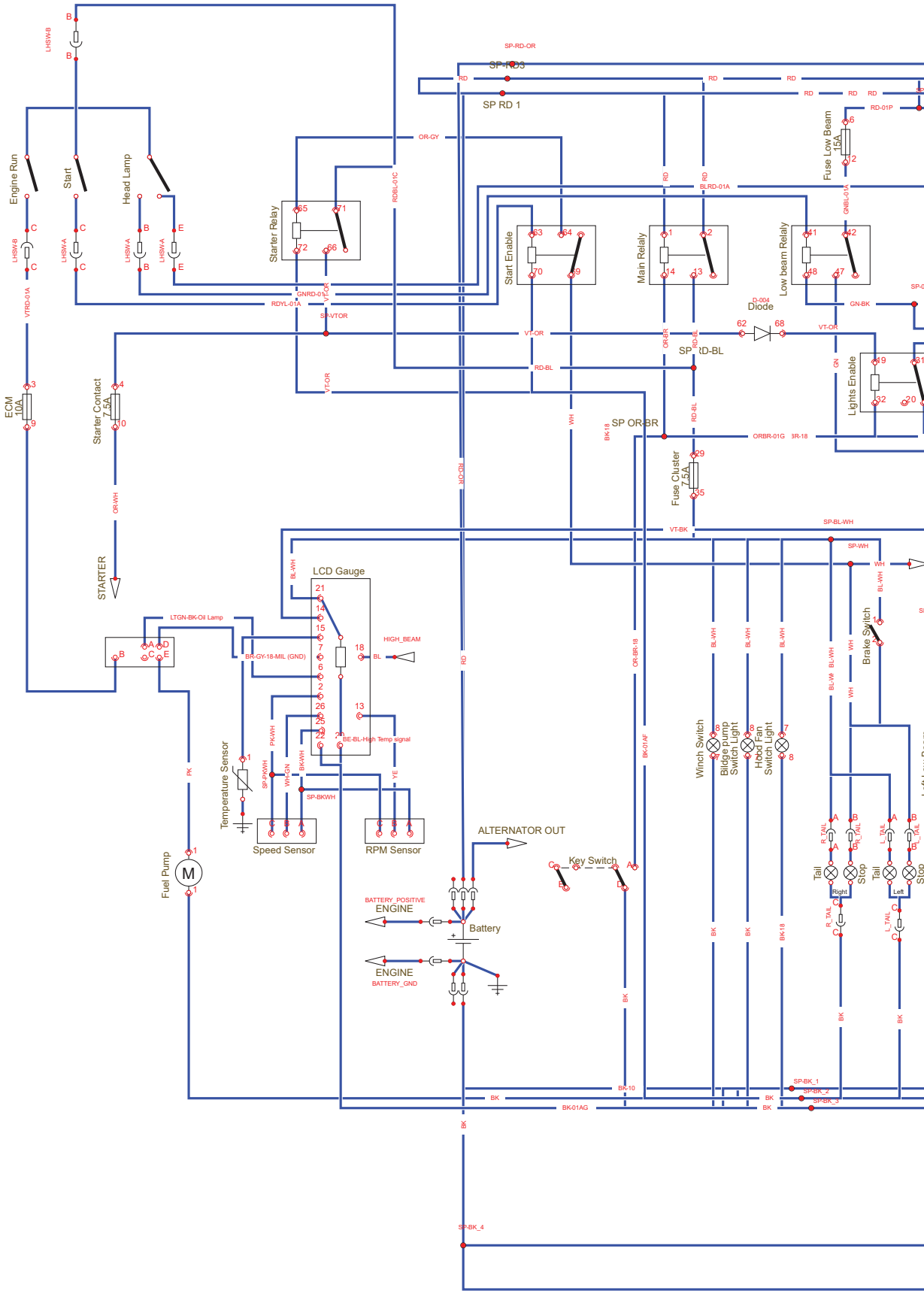
Engine Run
Start
Head Lamp
Starter Relay
Start Enable
Main Relay
Low beam Relay
Fuse Low Beam 15A
Diode
D-004
ECM 10A
Starter Contact 7.5A
STARTER
LCD Gauge
Lights Enable
Fuse Cluster 7.5A
Brake Switch
LTGN-BK-Oil Lamp
HIGH_BEAM
BR-GY-18-MIL (GND)
BE-BL-High Temp signal
Temperature Sensor
Speed Sensor
RPM Sensor
Fuel Pump
ALTERNATOR OUT
Key Switch
Winch Switch
Bildge pump Switch Light
Hood Fan Switch Light
Tail
Stop
Right
Left
BATTERY_POSITIVE
ENGINE
Battery
BATTERY_GND
SP RD 1
SP OR-BR
SP RD-BL
SP-BK_1
SP-BK_2
SP-BK_3
SP-BK_4

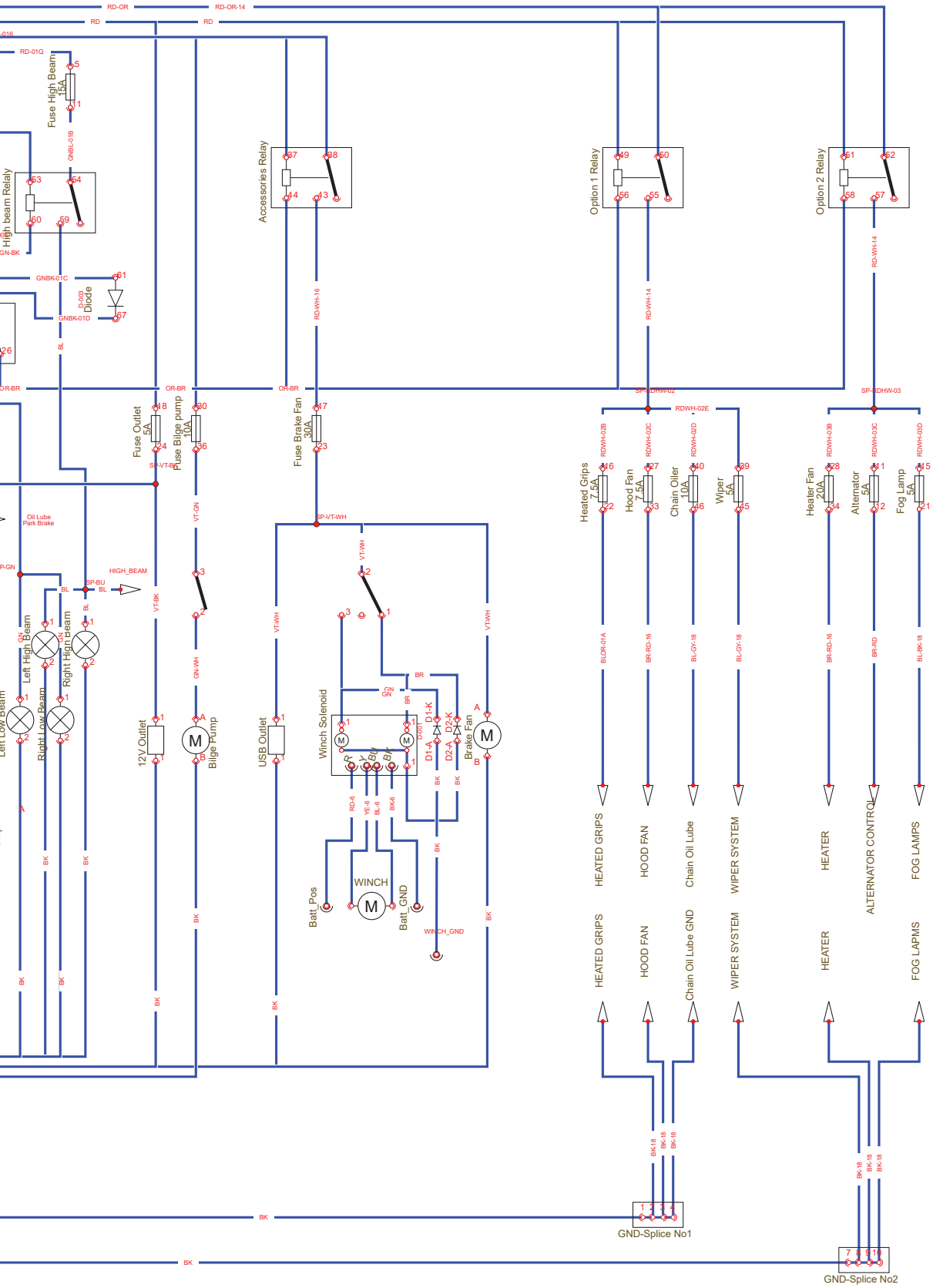
Fuse High Beam 15A
High beam Relaly
Accessories Relay
Option 1 Relay
Option 2 Relay
Diode
Fuse Outlet 5A
Fuse Bilge pump 10A
Fuse Brake Fan 30A
Heated Grips 7.5A
Hood Fan 7.5A
Chain Oiler 10A
Wiper 5A
Heater Fan 20A
Alternator 5A
Fog Lamp 5A
Oil Lube Park Brake
HIGH_BEAM
Left High Beam
Right High Beam
Left Low Beam
Right Low Beam
12V Outlet
Bilge Pump
USB Outlet
Winch Solenoid
Brake Fan
WINCH
Batt_Pos
Batt_GND
HEATED GRIPS
HOOD FAN
Chain Oil Lube
WIPER SYSTEM
HEATER
ALTERNATOR CONTROL
FOG LAMPS
HEATED GRIPS
HOOD FAN
Chain Oil Lube GND
WIPER SYSTEM
HEATER
FOG LAPMS
GND-Splice No1
GND-Splice No2

10022C

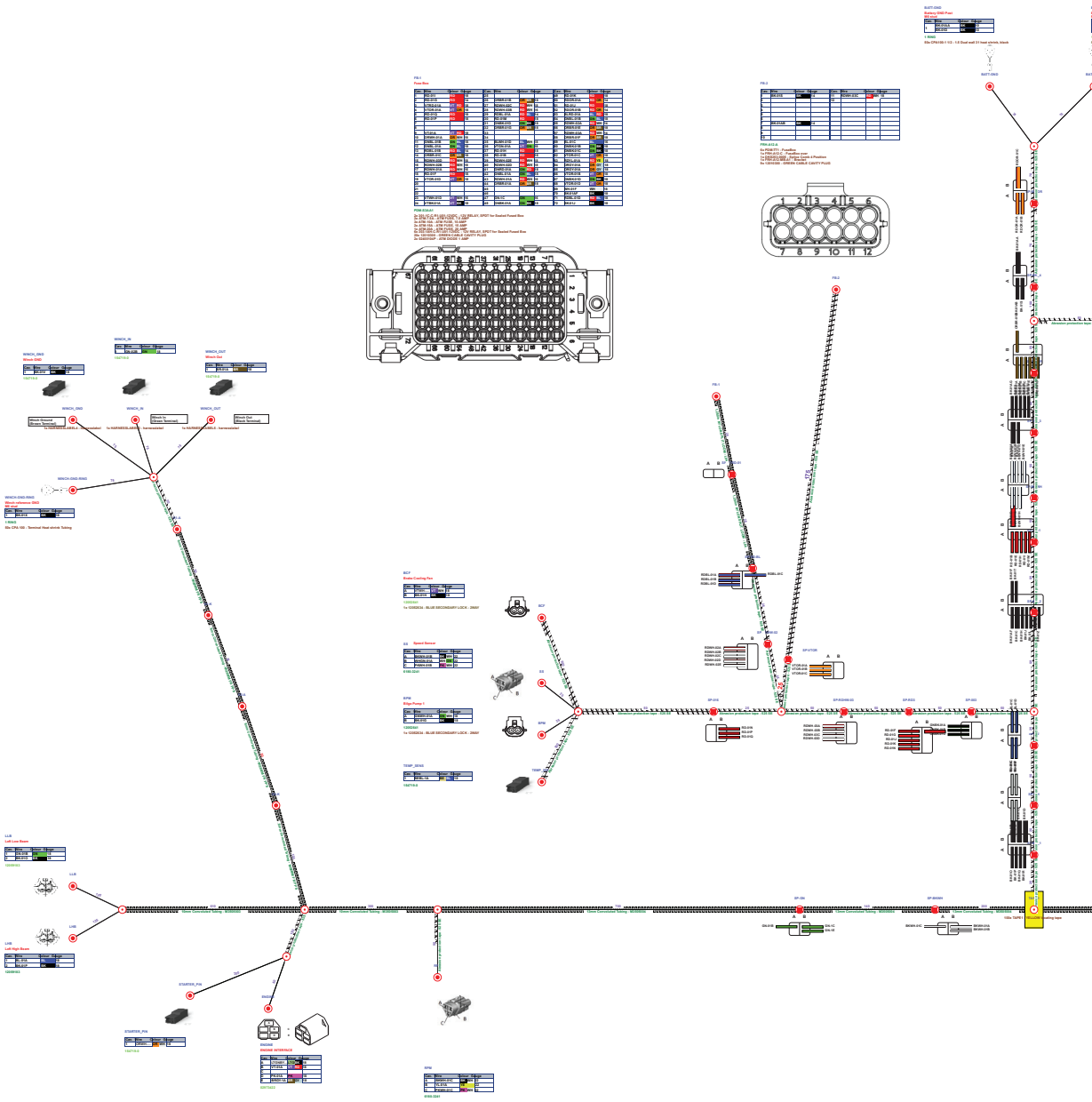

FUSE BLOCK

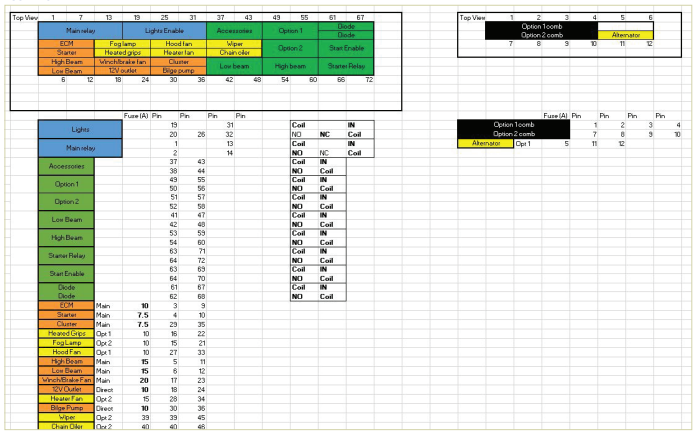
Top View
Main relay
Lights Enable
Accessories
Option 1
Diode
ECM
Fog lamp
Hood fan
Wiper
Option 2
Start Enable
Starter
Heated grips
Heater fan
Chain oiler
High Beam
Winch/Brake fan
Cluster
Low beam
High beam
Starter Relay
Low Beam
12V outlet
Bilge pump
Diode
Option 1comb
Option 2 comb
Alternator

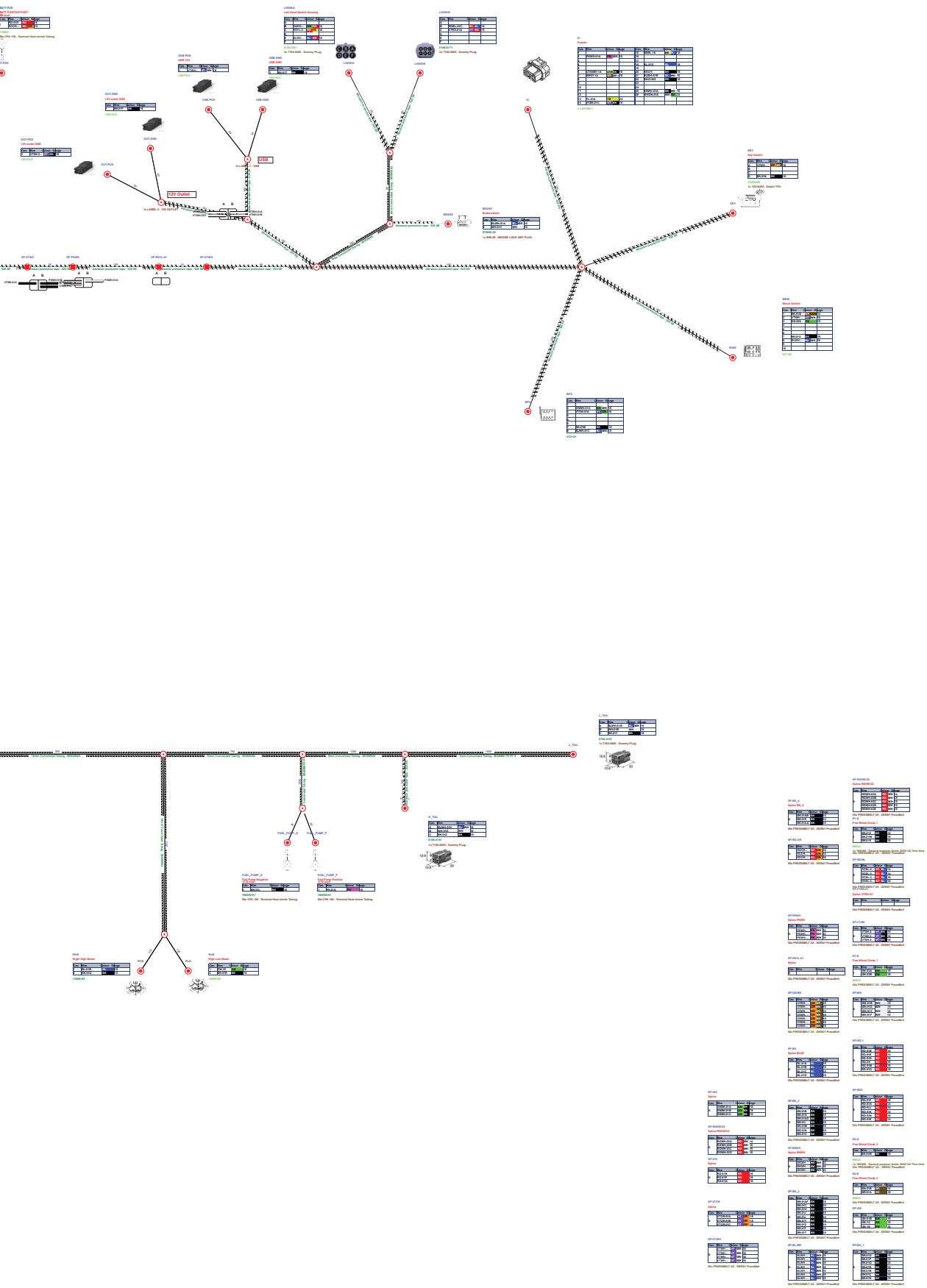

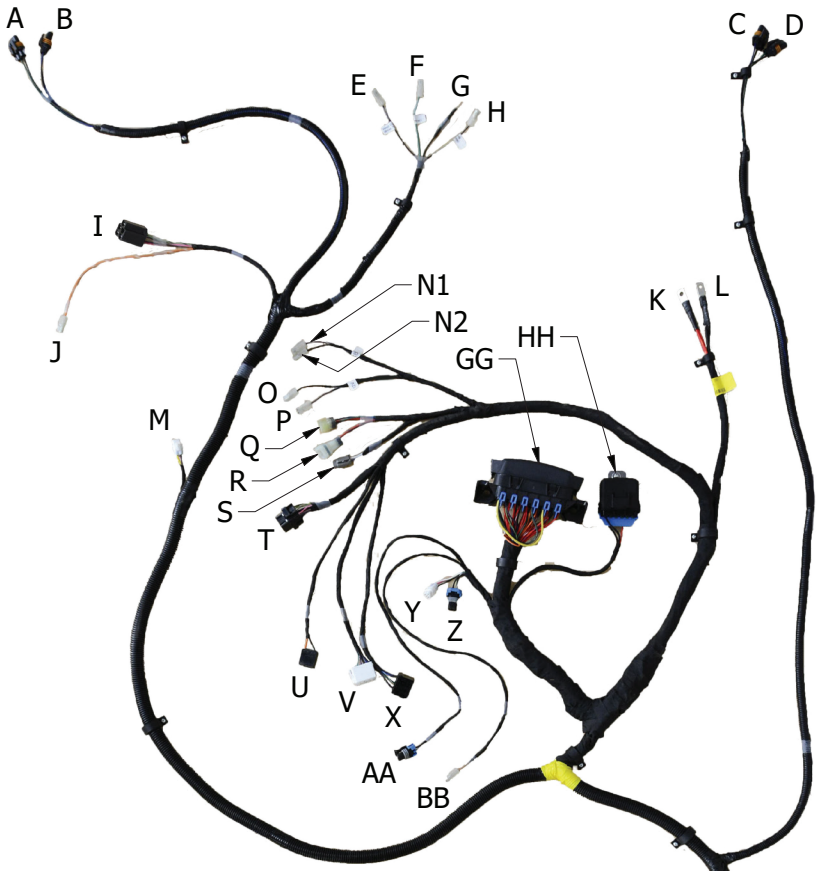

MAIN RELAY		LIGHTS ENABLE RELAY		ACCESSORIES RELAY	OPTION 1 RELAY 118-79	RUN RELAY
ECM 10 A	FOG LAMP 10 A	HOOD FAN 10 A		WIPER 10 A	OPTION 2 RELAY	START ENABLE RELAY
STARTER 7.5 A	HEATED GRIPS 10 A	HEATER FAN 15 A		CHAIN OILER 10 A		
HIGH BEAM 15 A	WINCH & BRAKE FAN 20 A	GAUGE 7.5 A		LOW BEAM RELAY	HIGH BEAM RELAY	STARTER RELAY
LOW BEAM 15 A	12V OUTLET 10 A	BILGE PUMP 10 A				FUSE PANEL 10579C

Fuse Panel Label "GG"
(p/n 10579C located inside cover)

4 SPLICE COMB	SPARE
4 SPLICE COMB	ALTERNATOR 20 A
FUSE PANEL 10585C	

Fuse Panel Label "HH"
(p/n 10585C located outer cover)

WIRE HARNESS ID CHART		
Ref.	**Description**	**Con/Wire Color**
A	Left Low Beam	Gn/Bk
B	Left High Beam	Bl/Bk
C	Right High Beam	Bl/Bk
D	Right Low Beam	Gn/Bk
E	Winch Out	Br
F	Winch In	Gn
G	Winch Ground Ring	Bk
H	Winch Ground	Bk
I	Engine Plug	6 pin Bl Con
J	Starter Connector	Or/Wh
K	Battery Positive	Rd
L	Battery Negative	Bl
M	RPM	3 pin Wh Con
N1	USB-Pos	Vt/Wh
N2	USB-Gnd	Bk
O	12V Outlet - Gnd	Bk
P	12V Outlet - Pos	Vt/Bk
Q	Left Hand Switch-A	Gn-Rd/RdYe/Bl-Rd
R	Left Hand Switch-B	Rd-Bl/Vt-Rd
S	Brake Switch-Handlebar	Bl-Wh/Wh
T	Instrument Panel Cluster	14 pin Bl Con
U	Key Switch	Or-Br/Bl
V	Winch Switch	10 pin Wh Con
X	Bilge Pump Switch	8 pin Bl Con
Y	Speed Sensor	3 pin Wh Con
Z	Bilge Pump	2 pin Bl-Bk-Gy Con, Gr-Wh/Bk
AA	Brake Cooling Fan	2 pin Bl-Bk-Gy Con, Vt-Wh/Bk
BB	Engine Temp Sensor	Be/Bl
CC	Fuel Pump - Neg	Bk
DD	Fuel Pump - Pos	Pk
EE	Left Tail Light	Bl-Wh/Wh/Bk
FF	Right Tail Light	Bl-Wh/Wh/Bk
GG	Fuse Box-Primary	72 pin Bl Con
HH	Fuse Box-Second	12 pin Bl Con
ACCS	Mini Relay	118-79

ARGO Products Manufactured by:

Ontario Drive & Gear Limited
220 Bergey Court
New Hamburg, Ontario
Canada N3A 2J5
Phone: (519) 662-2840
Fax: (519) 662-2421
www.argoxtv.com

ODG ***Dedicated to quality and performance***